ARMY EQUIPMENT
SUPPORT PUBLICATION

2320-D-128-201
5th Edition Jan 2009
(Superseding 4th Edition Dec 2001)

CONDITIONS OF RELEASE

1 ~~This information is released by the UK Government for Defence purposes only.~~

2 ~~This information must be afforded the same degree of security protection as that afforded to information of an equivalent security marking originated by the recipient Government or as required by the recipient Government's security regulations.~~

3 ~~This information may be disclosed only within the Defence Department of the recipient Government, except as otherwise authorized by the Ministry of Defence (Army).~~

4 This information may be subject to privately owned rights.

TRUCK UTILITY LIGHT (TUL) HS
TRUCK UTILITY MEDIUM (TUM) HS
AND (TUM) AMBULANCE HS, ALL VARIANTS
OPERATING INFORMATION

This publication contains information covering the requirements of Categories 2-0 at information level 1

~~FOR OFFICIAL USE ONLY CROWN COPYRIGHT RESERVED~~

Sponsored for use in the

UNITED KINGDOM MINISTRY OF DEFENCE AND ARMED FORCES

By

Operational Support Vehicle Programme (OSVP)
DE&S Abbey Wood
BRISTOL
BS34 8JH

AMENDMENT RECORD

Amdt No.	Incorporated By (Signature)	Date	Amdt No.	Incorporated By (Signature)	Date
1	[redacted]	05/10	31		
2		10/11	32		
3		03/13	33		
4		12/13	34		
5			35		
6			36		
7			37		
8			38		
9			39		
10			40		
11			41		
12			42		
13			43		
14			44		
15			45		
16			46		
17			47		
18			48		
19			49		
20			50		
21			51		
22			52		
23			53		
24			54		
25			55		
26			56		
27			57		
28			58		
29			59		
30			60		

RECORD OF ADVANCE INFORMATION LEAFLETS

AIL	Date rec'd	Deleted by Amdt/ AIL

AIL	Date rec'd	Deleted by Amdt/ AIL

AIL	Date rec'd	Deleted by Amdt/ AIL

RECORD OF SERVICE TEMPORARY AMENDMENTS LEAFLETS (STAL)

Identity	Date received	Deleted by Amdt or AIL or STAL

Identity	Date received	Deleted by Amdt or AIL or STAL

CONTENTS

Page

PRELIMINARY MATERIAL

Front cover (title page) ..... (i)/(ii)
Amendment record ..... (iii)/(iv)
Record of advance information leaflets ..... (v)/(vi)
Record of Service temporary amendments leaflets ..... (v)/(vi)
Contents (this list) ..... (vii)
Preface ..... (ix)
Introduction ..... (ix)
Related and associated publications ..... (ix)
Related publications ..... (ix)
Associated publications ..... (ix)
Planning information ..... (x)
Warnings ..... (xi/xii)
Comment(s) Form 10 ..... Final Leaf

OPERATING INFORMATION

Chapter

1 General Description
1-1 Basic vehicle
1-2 Fitted for Radio (FFR)
1-3 Field Ambulance
1-4 Winter/water
1-5 Winterised
1-6 Air drop
1-7 Helicopter Support Platform
1-8 Commanders IK
1-9 Weapons Mounted Installation Kit
1-10 Tropical Field Ambulance
1-11 Winterised/Waterproofed Field Ambulance
1-12 Waterised Weapons Mounted Installation Kit (WMIK)
2 Controls and Instruments
2-1 Basic vehicle
2-2 Fitted for Radio (FFR)
2-3 Field Ambulance
2-4 Winter/water
2-5 Winterised
2-6 Air drop
2-7 Helicopter Support Platform

(continued)

CONTENTS (continued)

Chapter

2-8 Commanders IK
2-9 Weapons Mounted Installation Kit
2-10 Tropical Field Ambulance
2-11 Winterised/Waterproofed Field Ambulance
2-12 Waterised Weapons Mounted Installation Kit (WMIK)
3 Operating instructions
3-1 Basic vehicle
3-2 Fitted for Radio (FFR)
3-3 Field Ambulance
3-4 Winter/water
3-5 Winterised
3-6 Air drop
3-7 Helicopter Support Platform
3-8 Commanders IK
3-9 Weapons Mounted Installation Kit
3-10 Tropical Field Ambulance
3-11 Winterised/Waterproofed Field Ambulance
3-12 Waterised Weapons Mounted Installation Kit (WMIK)
4 User maintenance
4-1 Basic vehicle
4-2 Fitted for Radio (FFR)
4-3 Field Ambulance
4-4 Winter/water
4-5 Winterised
4-6 Air drop
4-7 Helicopter Support Platform
4-8 Commanders IK
4-9 Weapons Mounted Installation Kit
4-10 Tropical Field Ambulance
4-11 Winterised/Waterproofed Field Ambulance
4-12 Waterised Weapons Mounted Installation Kit (WMIK)
5 User spares
6 Destruction of equipment to prevent enemy use

PREFACE

Sponsor: OSVP
Publication Agency: OSVP

INTRODUCTION

1 Service users should forward any comments on this publication through the channels prescribed in AESP 0100-P-011-013. An AESP Form 10 is provided after the preliminary pages of this publication; it should be photocopied and used for forwarding comments on this AESP.

2 AESPs are issued under Defence Council authority and where AESPs specify action to be taken, the AESP will of itself be sufficient authority for such action and also for the demanding of the necessary stores.

3 The subject matter of this publication may be affected by Defence Council Instructions (DCIs), by Standing Operating Procedures (SOPs) or by local regulations. When any such instruction, Order or regulation contradicts ant portion of this publication it is to be taken as the overriding authority.

RELATED AND ASSOCIATED PUBLICATIONS

Related publications

4 The Octad for the subject equipment consists of the publications shown overleaf. All references are prefixed with the first eight digits of this publication. The availability of the publications can be checked by reference to the relevant Group Index (see AESP 0100-A-001-013).

Associated publications

5 ReferencesTitle

AESP 2320-D-128-Octad	Truck Utility Light (TUL) HS, Truck Utility Medium (TUM) HS, and (TUM) Ambulance HS.
AESP 2540-A-100-201	Operating Instructions for Pintle Towing Rotatable

Category/Sub category			Information Level			
			1 User/ Operator	2 Unit Maintenance	3 Field Maintenance	4 Base Maintenance
1	0	Purpose and Planning information	101	*	*	*
	1	Equipment Support Policy Directives	111	*	*	*
	2	Purpose and Planning Information. Medical and Dental	121	*	*	*
2	0	Operating Information	201	*	*	*
	1	Aide Memoir	*	*	*	*
	2	Training Aids	*	*	*	*
3		Technical Description	201	302	*	*
4	1	Installation Instruction	411	*	*	*
	2	Preparation for Special Environments	421	*	*	*
5	1	Failure Diagnosis	*	512	512	*
	2	Repair Instructions	*	522	523	524
	3	Inspection Standards	*	532	533	533
	4	Calibration Standartls	*	*	*	*
6		Maintenance Schedules	601	*	*	*
7	1	Illustrated Parts Catalogue	711	*	*	*
	2	Commercial Parts Lists	721	*	*	*
	3	Complete Equipment Schedule Production	731	*	*	*
	4	Complete Equipment Schedule, Service Edition (Simple Equipment)	741	*	*	*
	5	Complete Equipment Schedule, Service Edition (Complex Equipment)	751	*	*	*
8	1	Modification Instructions	811	*	*	*
	2	General Instructions, Special Technical Instructions and Servicing Instructions	821	*	*	*
	3	Service Engineered Modification Instructions (RAF only)	*	*	*	*

* Category/Sub category not published

WARNINGS

HAZARDOUS SUBSTANCES

6 Before using any hazardous substance or material, the user must be conversant with the safety precautions and first aid instructions:

6.1 On the label of the container it was supplied in;

6.2 On the material Safety Data Sheet;

6.3 In local Safety Orders and Regulations

WARNINGS

(1) THIS VEHICLE HAS A 2.5 LITRE DIRECT INJECTED TURBOCHARGED ENGINE, WHICH IS VERY POWERFUL.

(2) CARE MUST BE TAKEN TO READ ALL INSTRUCTIONS AND CONDITIONS WITHIN THIS PUBLICATION.

(3) WHEN READING THIS PUBLICATION TAKE NOTE OF THE DRIVING CONDITIONS FOR OFF ROAD OPERATIONS.

COMMENT(S) ON AESP*

To FRACAS
BFPO 794

From .....
.....
.....
.....

Senders Reference	Bin Number	Date
AESP* Title:		
Chapter (s)/instruction	**Page(s)/Paragraphs**	
If you require more space please use the reverse of this form or a separate piece of paper. **Comment(s):**		

Signed: ..... Telephone No.: .....

Name(Capitals): ..... Rank/Grade: ..... Date: .....

✂..... ....

FOR AESP* SPONSOR ONLY

To .....
.....
.....
.....

From .....
.....
.....
.....

Thank you for commenting on AESP*.....

Your reference..... Dated .....

Action is being taken to:	Tick		Tick
Issue a revised/amended AESP		Under investigation	
Incorporate comment(s) in future amendments		No action required	
Remarks			

Signed: ..... Telephone No.: .....

Name(Capitals): ..... Rank/Grade: ..... Date: .....

* AESP or EMER

AESP Form 10 (Issue 5.0 dated Dec 01)

Jan 09

CHAPTER 1

GENERAL DESCRIPTION

CONTENTS

Para

1 Introduction
2 General

Fig		Page
1	Truck Utility Light	2
2	Truck Utility Medium	3
3	Field Ambulance	3
4	Winter/Water	4
5	Commanders IK	5/6
6	Weapons Mounted Installation Kit	5/6

INTRODUCTION

1 This Chapter gives a General Description of the Truck Utility Light (TUL) HS, Truck Utility Medium (TUM) HS and (TUM) Ambulance HS variants listed in the following sub-chapters:

1.1 Chapter 1-1 Basic vehicle

1.2 Chapter 1-2 Fitted For Radio (FFR)

1.3 Chapter 1-3 Field Ambulance

1.4 Chapter 1-4 Winterised/Waterproofed

1.5 Chapter 1-5 Winterised

1.6 Chapter 1-6 Air drop

1.7 Chapter 1-7 Helicopter Support Platform

1.8 Chapter 1-8 Commanders IK

1.9 Chapter 1-9 Weapons Mounted Installation Kit

1.10 Chapter 1-10 Tropical Field Ambulance

1.11 Chapter 1-11 Winterised/Waterproofed Field Ambulance

1.12 Chapter 1-12 Waterised Weapons Mounted Installation Kit

General

2 The information given in this chapter is applicable to both left and right hand drive vehicles.

Fig 1 Truck Utility Light

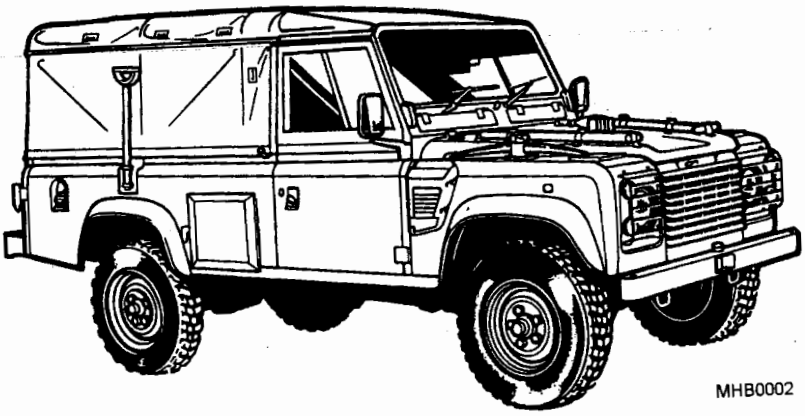

Fig 2 Truck Utility Medium

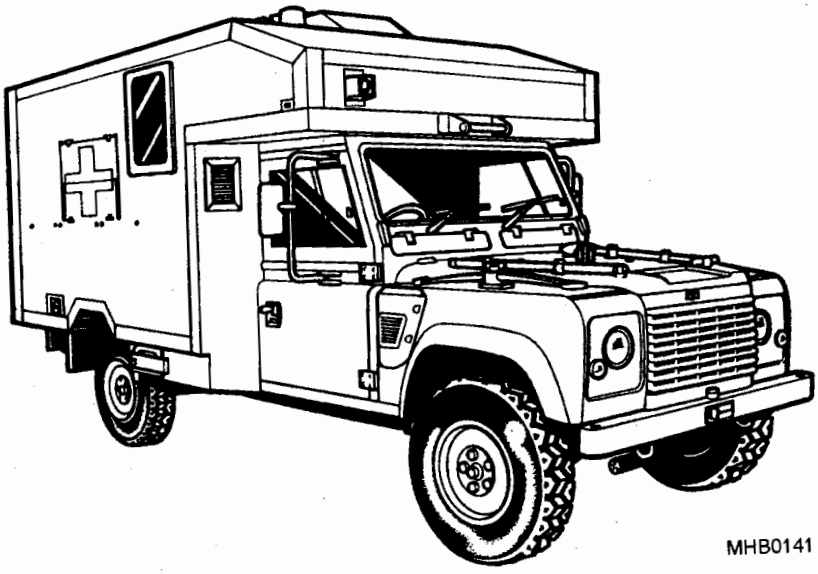

Fig 3 Field Ambulance

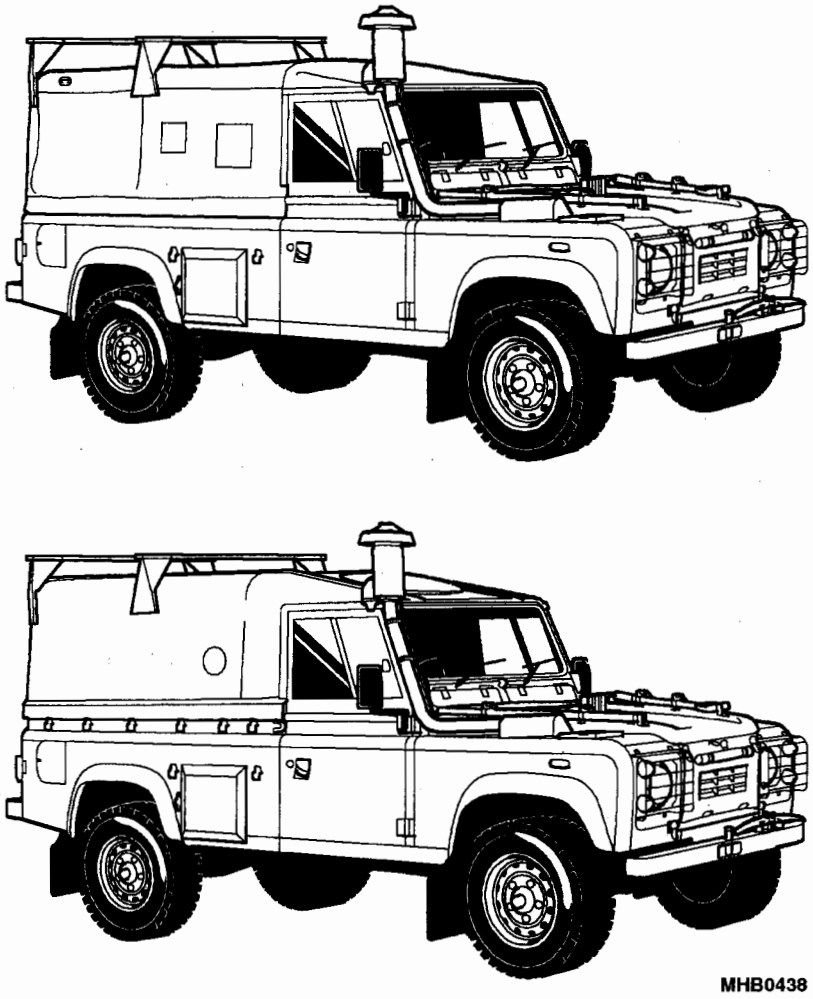

Fig 4 Winterised/Waterproofed

MHB0753

Fig 5 Commanders IK

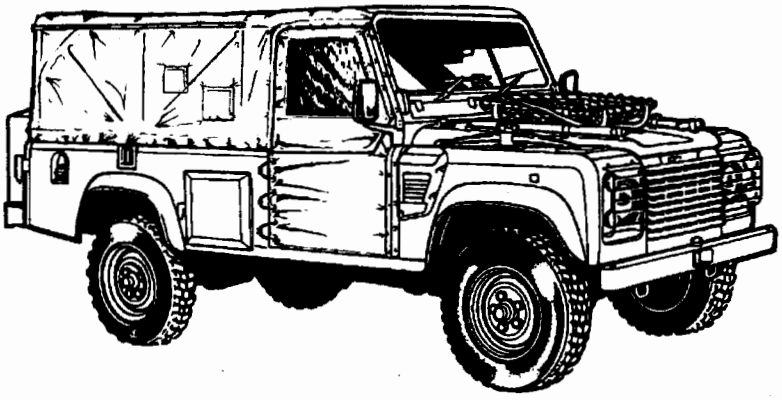

RIC201.1

Fig 6 Weapons Mounted Installation Kit

CHAPTER 1-1

BASIC VEHICLE

CONTENTS

Para

1 Introduction
2 Technical data
  Technical data for TUL
  Technical data for TUM
3 Labels
4 Rotating blades warning label
5 Brake fluid warning label
6 Radiator filler plug warning label
7 Anti-freeze label
8 Engine oil label
9 Differential lock warning label
10 Nomenclature label
11 Vehicle identification number plate (VIN)
12 Fuel label
13 24 volt warning labels
14 Jerry can label
15 Spare wheel lifting harness label
16 Vehicle Identification Number (VIN)
17 Vehicle weight plate
18 Running-in period
  Warnings
  Cautions
19 The vehicle
20 Power train
21 Chassis
22 Front bumper
23 Front towing pintle
24 Recovery/tie down shackles
25 Suspension
26 Brakes
27 Brake actuation
28 Brake failure warning system
29 Axles
30 Front axles
31 Half shafts
32 Hub drive arrangements

(continued)

CONTENTS (continued)

Para

33 Steering swivels
34 Axle breathers
35 Rear axles
Rear axle (TUL)
Rear axle (TUM)
36 Hub driving arrangement
37 Body
38 Windscreen
39 Bonnet
40 Spare wheel stowage
41 Cab doors
42 Door locks
43 Door windows
44 Scuttle
45 Radiator mounting and grille
46 Front wings
47 Body side and rear quarters
48 Jerry can stowage
49 Bulkhead
50 Small arms clip
51 Floor
52 Electrical systems
53 Alternator
54 Fuses
55 Batteries
56 Lights
57 Fuel system
58 Fuel lift pump
59 Fuel sedimenter
60 Fuel filter
61 Engine cooling system
62 Expansion tank
63 Radiator
64 Infared lighting system

Fig		Page
1	Nomenclature label	4
2	Under bonnet labels	5
3	24 volt warning label (NATO socket)	5
4	Differential lock warning label	6

(continued)

CONTENTS (continued)

Fig		Page
5	24 volt warning label (IVSS)	7
6	Jerry can label	8
7	Anti-freeze label on windscreen	8
8	Spare wheel lifting harness label	9
9	Vehicle identification label (VIN)	10
10	Vehicle identification number plate	11
11	Vehicle weight plate	12
12	Under the bonnet layout	15
13	Truck Utility Light (TUL)	17
14	Truck Utility Medium (TUM)	19
15	Under the vehicle (TUL)	21
16	Under the vehicle (TUM)	23
17	Vehicle dash layout	25
18	Inside the rear of the vehicle	26

INTRODUCTION

1 Sub-chapter 1-1 gives a General Description for all items common to the Truck Utility Light (TUL) HS and Truck Utility Medium (TUM) HS vehicles.

TECHNICAL DATA

2 The technical data for the TUL and TUM vehicles are as follows:

Technical data (TUL)

Length	3835 mm (150.9 ins)
Width	1910 mm (75.2 ins)
Height (unladen)	2150 mm (84.6 ins)
Track (front and rear)	1521 mm (59.9 ins)
Gross Vehicle Weight (GVW)	[redacted]
Fuel capacity	55,0 litres (12.0 gals)

Technical data (TUM)

Length	4550 mm (179.1 ins)
Width	1910 mm (75.2 ins)
Height (unladen)	2200 mm (84.6 ins)
Track (front and rear)	1521 mm (59.9 ins)
Gross Vehicle Weight (GVW)	[redacted]
Fuel capacity	82,0 litres (18.0 gals)

LABELS

3 There are, around the vehicle, labels of various kinds, some for information purposes, others to guard the user when operating the vehicle.

Rotating blades warning label

4 The label is located under the bonnet, on top of the radiator cowling (Fig 2).

Brake fluid warning label

5 The label is located under the bonnet (Fig 2), moulded into the brake fluid reservoir.

Radiator filler plug warning label

6 The label is located on the top of the radiator adjacent to the plug (Fig 2).

Anti-freeze label

7 There are two labels, one of which is attached to the windscreen (Fig 7) and the other can be found under the bonnet (Fig 2), affixed to the top of the radiator.

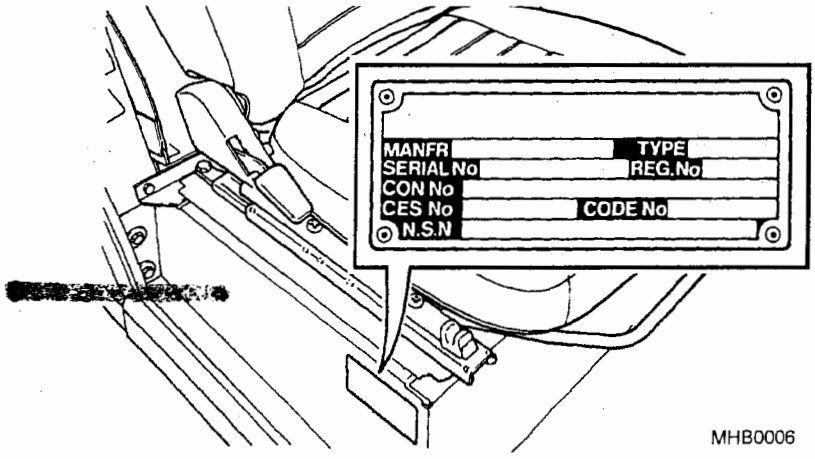

[redacted] Fig 1 Nomenclature label

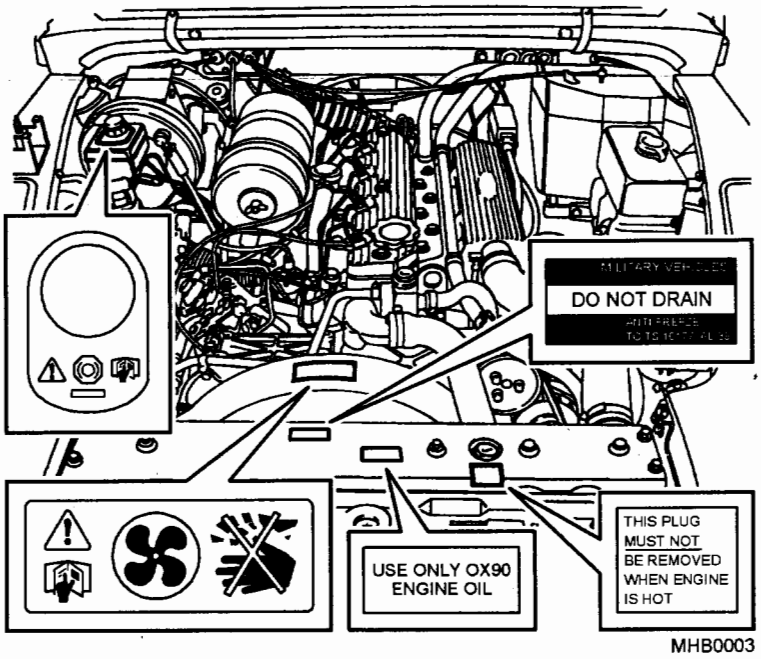

Fig 2 Under bonnet labels

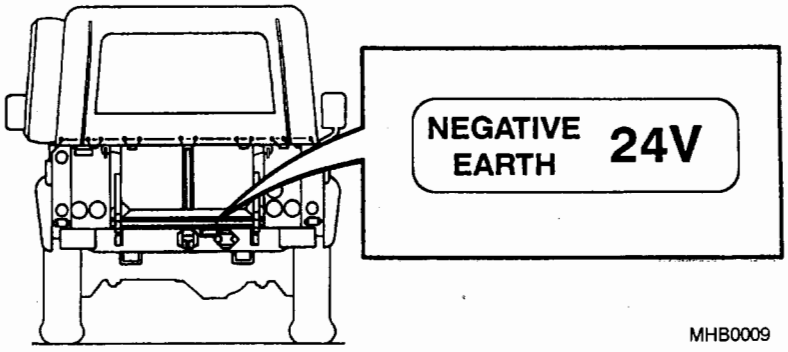

Fig 3 24 volt warning label (NATO socket)

Engine oil label

8 The label is located on top of the radiator and advised that only OX90 grade of oil is put into the engine.

Differential lock warning label

9 The label is located to the left of the steering wheel, mounted to the right of the auxiliary instrument panel (Fig 4).

Nomenclature label

10 The label is located on the side of the heel box, driver's side only (Fig 1).

Vehicle identification number plate (VIN)

11 The label is located under the bonnet on top of the brake pedal box (Fig 8).

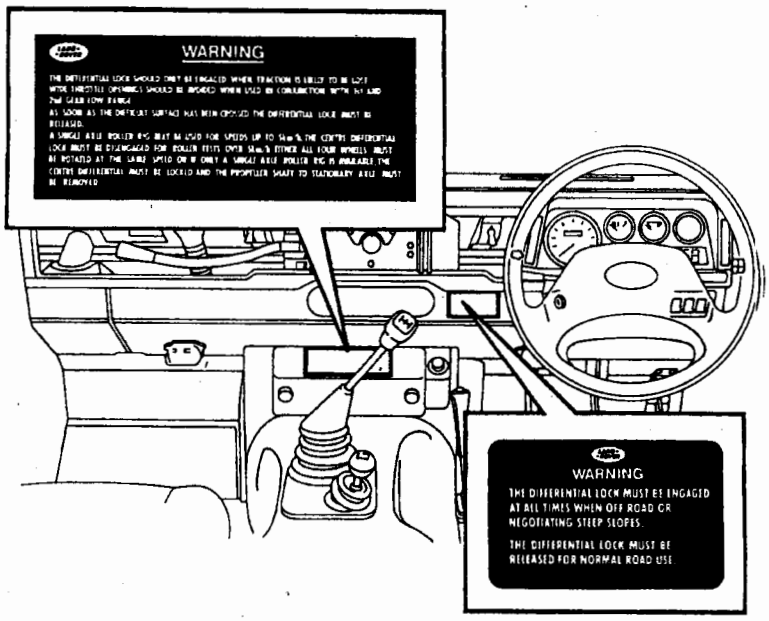

MHB0005

Fig 4 Differential lock warning label

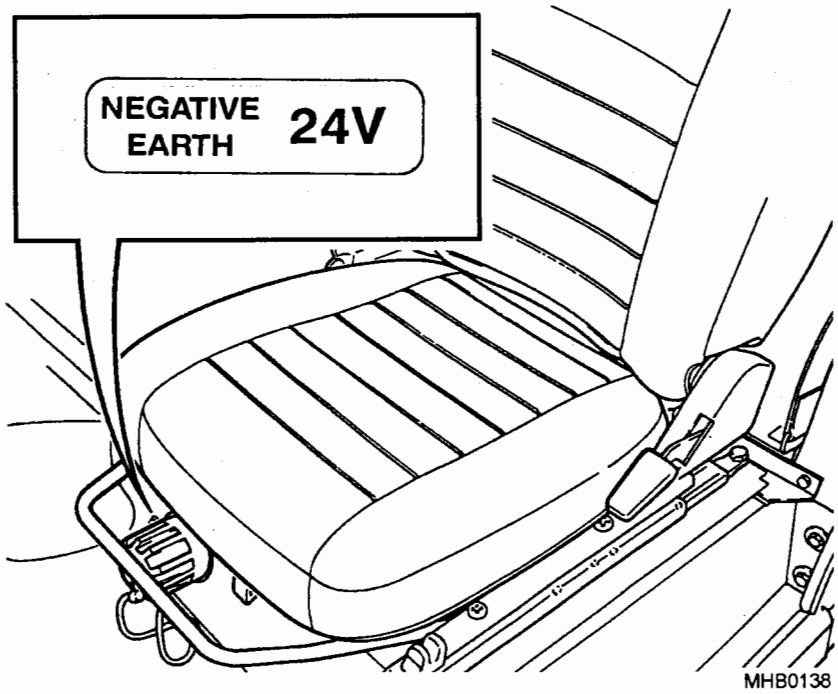

Fig 5 24 volt warning label (IVSS)

Fuel label

12 The label is located under the filler cap.

24 volt warning labels

13 The labels are located on the rear crossmember (Fig 3) adjacent to the 12 pin NATO socket and the Inter Vehicle Starting Socket (IVSS) (Fig 5) and inform the user that the vehicle system is 24 volts only.

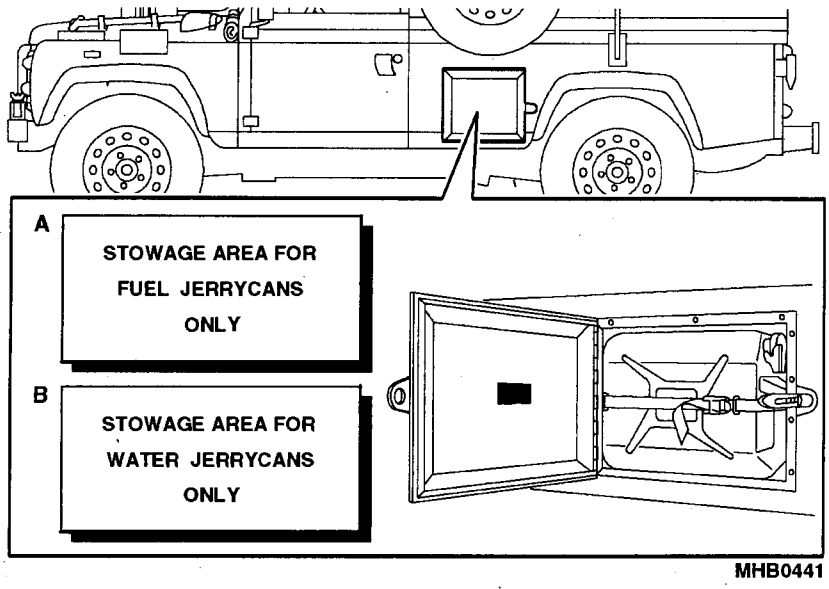

Fig 6 Jerry can labels

Jerry can labels

14 The labels are located on the inside of the respective compartment doors (Fig 6).

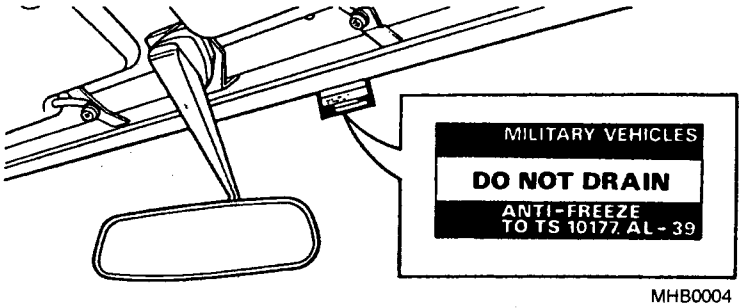

Fig 7 Anti-freeze label on windscreen

Spare wheel lifting harness label

15 The label is located on the harness and is visible when the spare wheel is in it's stowed position.

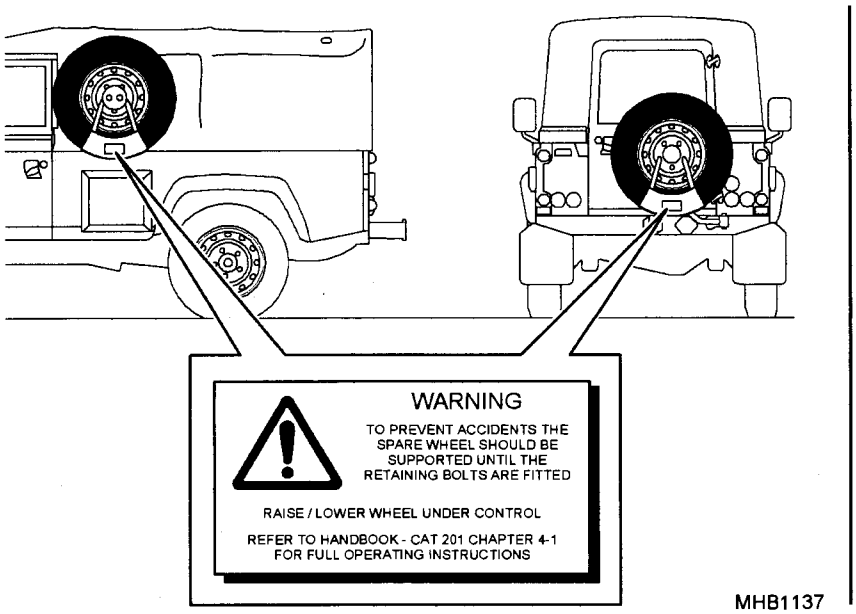

Fig 8 Spare wheel lifting harness label

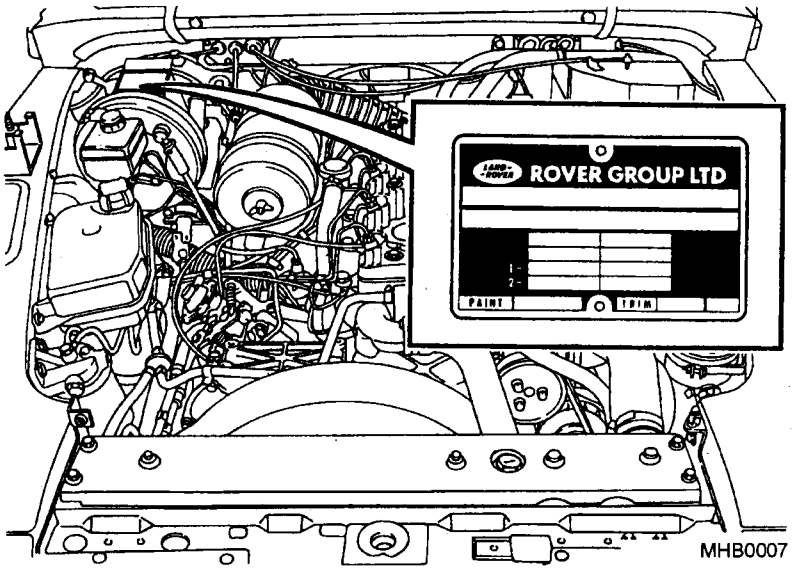

Fig 9 Vehicle identification label (VIN)

VEHICLE IDENTIFICATION NUMBER (VIN)

16 The vehicle identification number and the recommended maximum vehicle weights are stamped on a plate (Fig 10) riveted to the top of the brake pedal box in the engine compartment. The number is also stamped on the right-hand side of the chassis forward of the spring mounting turret and on a plate fixed between the dash and the windscreen located on the passenger side.
Check for a weight plate on the heel box to confirm if the VIN plate weights have been superseded.

VEHICLE WEIGHT PLATE

17 The vehicle weight plate is located on the side of the drivers heel box (Fig 11).

RUNNING-IN PERIOD

18 Progressive running-in of the vehicle is most important and has a direct bearing on reliability and smooth running throughout its life. The most important point is not to hold the vehicle on a large throttle opening for any sustained periods. To start with, the maximum speed should be limited to 65 to 80 km/h (40 to 50 mph) on a light throttle and this may be progressively increased over the first 2,500km (1550 miles).

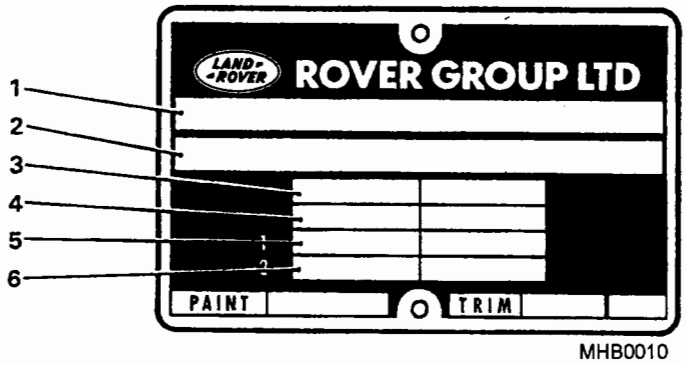

1	Type approval
2	V.I.N. (minimum of seventeen digits).
3	Maximum permitted laden weight of vehicle.
4	Maximum vehicle and trailer weight.
5	Maximum road weight - front axle
6	Maximum road weight - rear axle

Fig 10 Vehicle identification number plate.

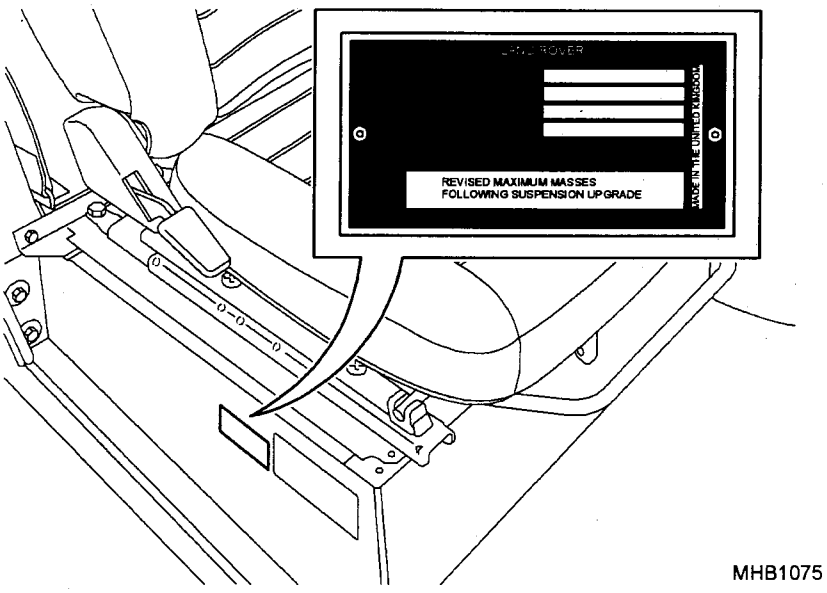

Fig 11 Vehicle weight plate.

WARNINGS

(1) TYRES. DO NOT MIX CROSS-PLY AND RADIAL-PLY TYRES ON THIS VEHICLE.

(2) FILLER CAP. DO NOT REMOVE THE EXPANSION TANK FILLER CAP WHEN THE ENGINE IS HOT, BECAUSE THE COOLING SYSTEM IS PRESSURISED AND PERSONAL SCALDING COULD RESULT.

(3) LIQUIDS. MANY LIQUIDS AND SUBSTANCES USED IN MOTOR VEHICLES ARE POISONOUS; THEY MUST NOT BE CONSUMED UNDER ANY CIRCUMSTANCES AND MUST BE KEPT AWAY FROM OPEN WOUNDS. THESE SUBSTANCES INCLUDE BRAKE FLUID, FUEL, WINDSCREEN WASHER ADDITIVES, LUBRICANTS, BATTERY CONTENTS, VARIOUS ADHESIVES, COOLING SYSTEM CORROSION INHIBITOR AND POWER ASSISTED STEERING FLUID.

CAUTIONS

(1) SERVICING. Regular servicing, as described in (Cat 601) and (Cat 111) is essential to help provide safe, dependable and economical motoring.

(2) SEATS AND SAFETY HARNESS. All crew/passengers must occupy the designated seats and wear the safety harness provided, even for the shortest journey.

(3) LAYOUT. Before driving, learn the layout and use of all controls, gears and switches.

(4) SEATING. Adjust the seat to achieve a comfortable driving position with full control over the vehicle.

(5) CONTROLS. Always start the vehicle and operate the controls from the driving position

(6) BRAKING. Ensure that the vehicle speed is low enough for an emergency stop to be made safely under all road and vehicle loading conditions.

(7) VISION. Keep the windscreen and side windows clean to give a clear vision. Use a solvent in the screen washer reservoir.

(8) LIGHTS. Maintain all external lights in good working order and ensure correct setting of headlamp beams.

(9) TYRES. Maintain the correct tyre pressures. These should be checked as described in (Cat 601).

(10) WADING. Before wading make sure that the timing cover drain plug and the flywheel housing drain plug are in position. When wading ensure that the vehicle does not move above 5 Kph (3 mph)

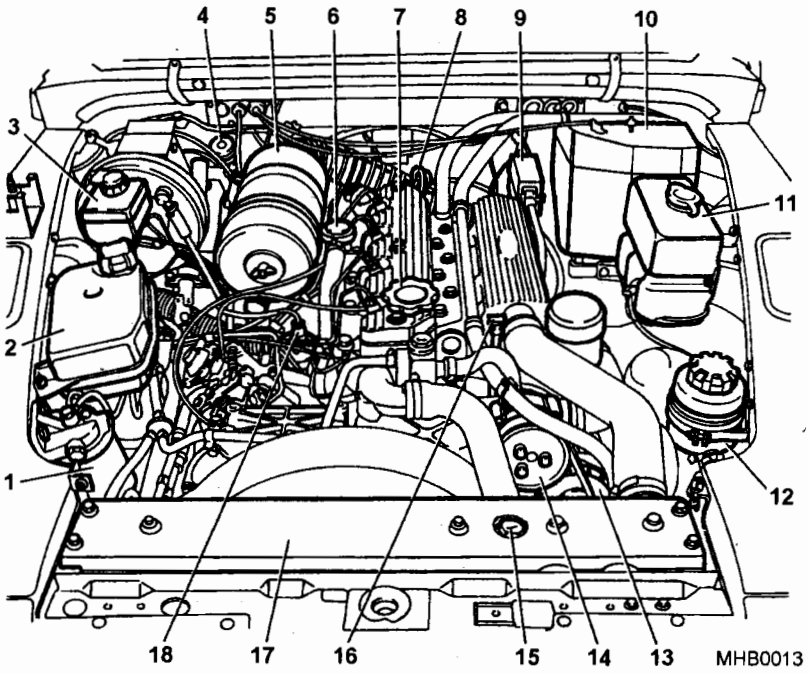

1	Fuel filter	10	Heater matrix
2	Expansion tank	11	Windscreen washer reservoir
3	Brake fluid reservoir	12	Power steering reservoir
4	Clutch fluid reservoir	13	24 volt ducted alternator
5	Air cleaner	14	Water pump
6	Crankcase breather	15	Radiator filler cap
7	Engine oil filler cap	16	Dipstick
8	Breather pipes	17	Radiator
9	Auxiliary fuses	18	Fuel lift pump

Fig 12 Under the bonnet layout

KEY TO FIG 13

1	Bumperettes
2	Rear stop lights
3	Rear number plate light
4	Full length hood
5	Convoy flag holders
6	Air intake
7	Side repeaters
8	TUUAM Coaxial stowage
9	Door handles
10	Fuel cap
11	Windscreen wipers
12	Spare wheel
13	Shovel
14	Front side lights
15	Headlights
16	Turn lights
17	Gearbox oil cooler
18	Front towing pintle
19	Convoy flag holders
20	Pick head
21	Door mirrors
22	Helve
23	Rear side light
24	Reversing light
25	12 pin trailer socket
26	Rotating towing hook
27	Turn lights
28	Rear fog lights

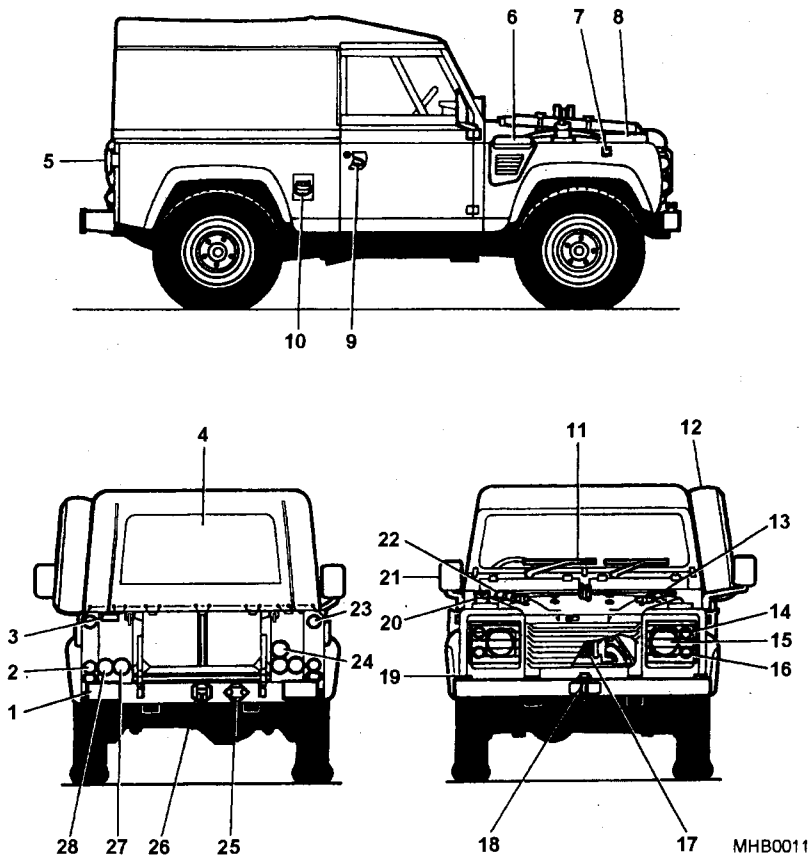

Fig 13 Truck Utility Light (TUL)

KEY TO FIG 14

1	Bumperettes
2	Rear stop lights
3	Rear number plate light
4	Full length canvas hood
5	Convoy flag holders
6	Air intake
7	Side repeaters
8	TUUAM Coaxial stowage
9	Door handles
10	Jerry can stowage
11	Fuel cap
12	Windscreen wipers
13	Spare wheel
14	Shovel
15	Front side lights
16	Headlights
17	Turn lights
18	Gearbox oil cooler
19	Front towing pintle
20	Pick head
21	Door mirrors
22	Helve
23	Rear side light
24	Reversing light
25	12 pin trailer socket
26	Rotating towing hook
27	Rear fog lights
28	Turn lights

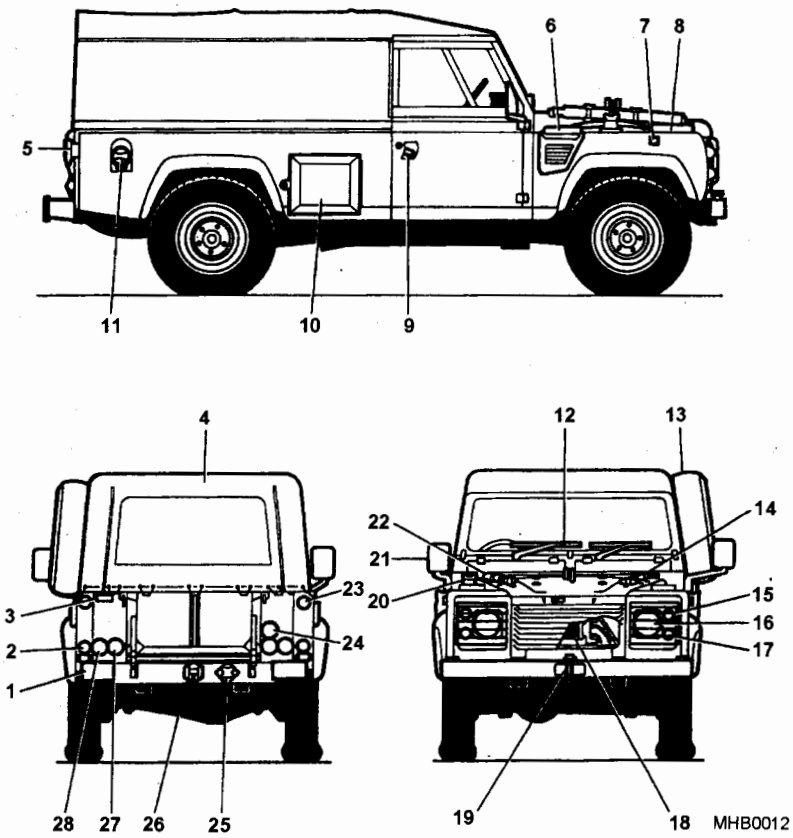

Fig 14 Truck Utility Medium (TUM)

KEY TO FIG 15

1	Front towing pintle
2	Front tie down shackles
3	Steering protection plate
4	Front axle breather
5	Engine sump
6	Exhaust pipe and catalyst
7	Main gearbox
8	Transmission brake drum
9	Rear axle breather
10	Rear tie down shackles
11	Rear bumperettes including anti-jack knife attachment points
12	Towing hook
13	Trailer socket
14	Convoy light
15	Rear brakes
16	Rear differential axle
17	Fuel sedimenter
18	Fuel filler pipe
19	Fuel tank
20	Rear propeller shaft
21	Transfer gearbox
22	Front propeller shaft
23	Engine oil filter
24	Track rod protection plate
25	Front brake and swivel pin housing
26	Front differential axle
27	Steering box
28	Front bumper

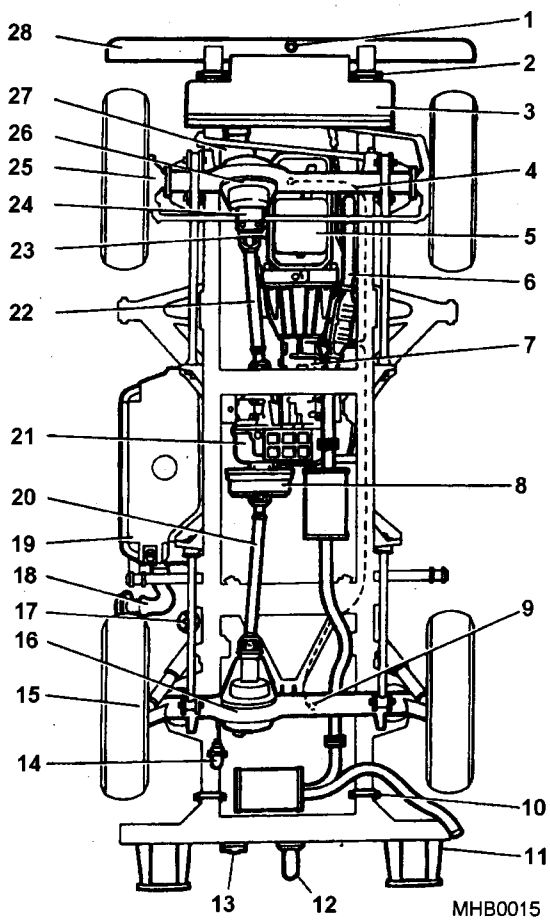

Fig 15 Under the vehicle (TUL)

KEY TO FIG 16

1	Front towing pintle
2	Front tie down shackles
3	Steering protection plate
4	Front axle breather
5	Engine sump
6	Engine oil filter
7	Exhaust pipe and catalyst
8	Rear axle breather
9	Rear tie down shackles
10	Rear bumperettes including anti-jack knife attachment points
11	Towing hook
12	Trailer socket
13	Fuel tank
14	Fuel filler pipe
15	Convoy light
16	Rear brakes
17	Rear differential axle
18	Rear propeller shaft
19	Fuel sedimenter
20	Transmission brake drum
21	Transfer gearbox
22	Main gearbox
23	Front propeller shaft
24	Anti roll bars
25	Track rod protection plate
26	Front brake and swivel pin housing
27	Front differential axle
28	Steering box
29	Front bumper

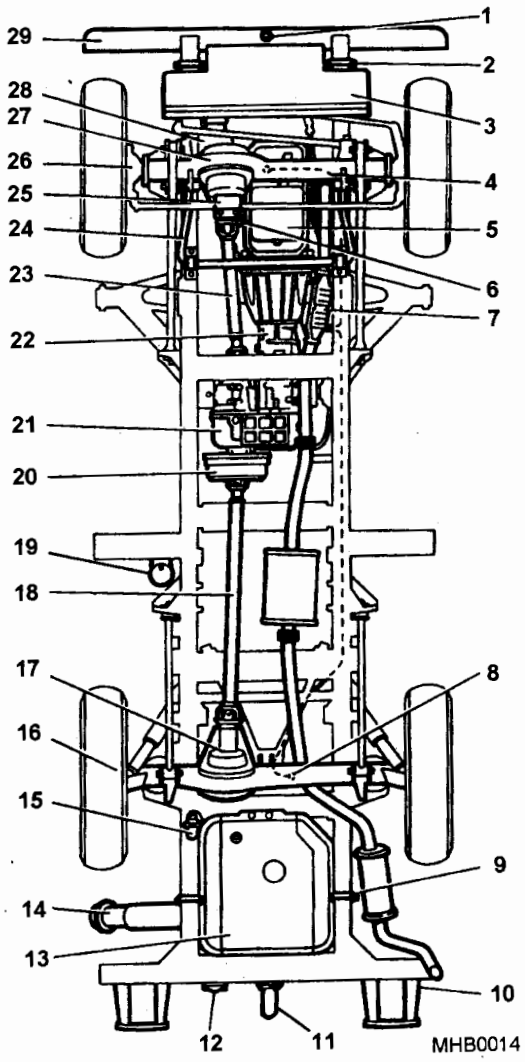

Fig 16 Under the vehicle (TUM)

KEY TO FIG 17

1	Map reading light
2	Ventilator control
3	Main lighting switch
4	Inspection sockets
5	Heater fan control
6	Speedometer
7	Fuel indicator
8	Coolant temperature indicator
9	Warning lights panel
10	Temperature control lever
11	Distribution control lever
12	Windscreen wash/wipe switch
13	Rear fog guard light switch
14	Headlamp levelling switch
15	Hazard warning lights switch
16	Accelerator pedal
17	Brake pedal
18	Starter switch
19	Clutch pedal
20	Headlight dip, direction indicators, horn and flasher switch
21	Hand brake
22	Hand throttle (FFR only)
23	Fuse box
24	Transfer gear/differential lock lever
25	Main gear change lever
26	Ammeter (FFR only)
27	Footwell air vents

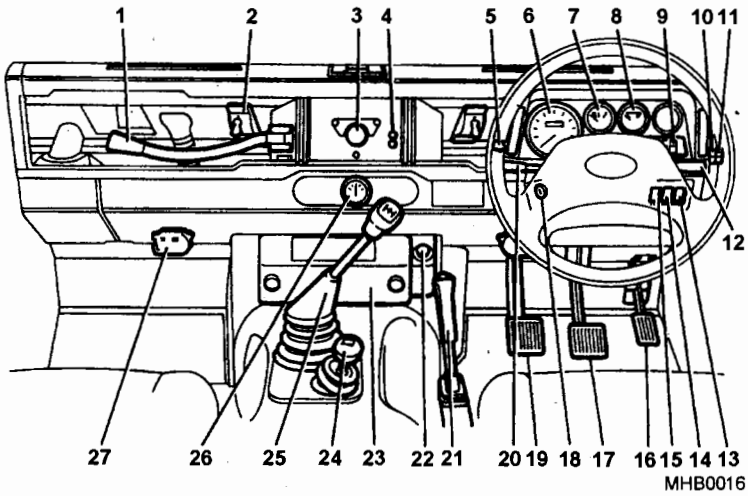

Fig 17 Vehicle dash layout

THE VEHICLE

19 The vehicle is of the four wheeled type, permanently driving through all four wheels and is available in right or left hand drive. It is capable of leaving made up road surfaces and travelling on to unmade ground the vehicle is capable of towing, when laden, the appropriate trailers without disproportionate loss of performance.

POWER TRAIN

20 The engine is a four cylinder, four stroke, compression ignition type with direct injection, turbocharged and intercooled with overhead valves and liquid cooling. The power is transmitted through a single dry plate clutch to a five forward and one reverse speed main gearbox and a two speed transfer gearbox with an integral central differential to both front and rear axles. With the combination of transfer gearbox and main gearbox the vehicle, in effect, has 12 gear ratios, ten forward and two reverse.

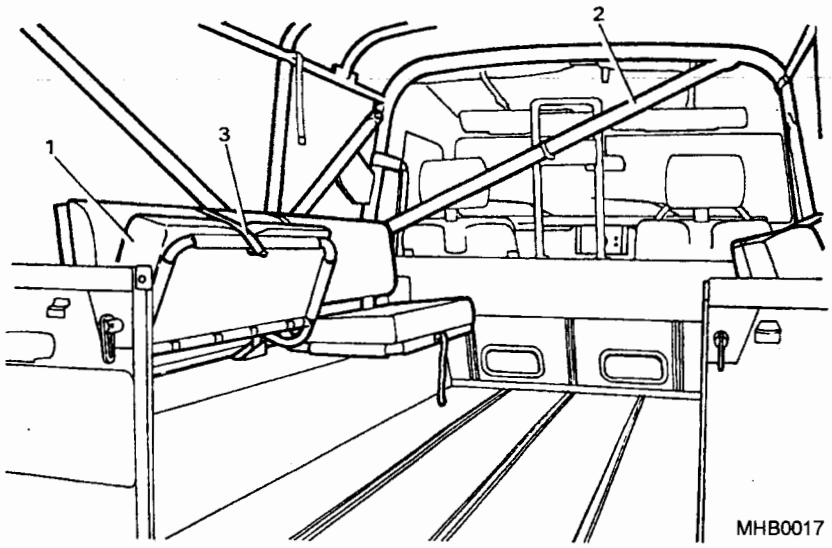

1	Fold down bench seats	3	Seat restraining straps
2	Roll over bar		

Fig 18 Inside the rear of the vehicle

CHASSIS

21 The chassis is constructed from two welded box section side members with five cross members on the TUL and seven cross members on the TUM vehicles and a detachable gearbox cross member.

Front bumper

22 Attached to the front of the chassis is a full width bumper complete with convoy flag holder facilities at each end.

Front towing pintle

23 The front towing pintle is built into the centre of the bumper and accepts a 75 mm (2.9 in.) eye.

Recovery/tie down shackles

24 Four recovery/tie down shackles are fitted to the chassis side members - two at the front and two at the rear for aircraft tie-down, lifting and recovery functions. In addition and attached to the front and rear bumpers are four lifting rings, the rear being incorporated in the bumperettes.

SUSPENSION

25 The suspension is provided by four helical coil springs, one at each wheel station with double acting hydraulic dampers and rubber buffers.

BRAKES

26 The brake circuit is divided to provide braking on all four wheels using ventilated disc brakes on the front and solid disc brakes on the rear wheels, with a servo-assisted hydraulic braking system. A mechanically operated transmission-parking brake is provided, utilising the drum brake system, mounted on the rear of the transfer gearbox output shaft.

Brake actuation

27 Brake actuation is by a pendant pedal acting through a vacuum assisted servo unit on a tandem hydraulic master cylinder. A direct drive engine pump supplies vacuum. Rear feed (TUL only) passes through a pressure-reducing valve.

Brake failure warning system

28 A warning light on the binnacle in the cab indicates hydraulic failure.

AXLES

29 The axles on the TUL and TUM vehicles are of the rigid construction type with a spiral bevel type differential at the front and rear.

Front axle

30 The front axle is made up of a two-piece pressed steel casing with offset banjo and spherical housings for universal joints in half shafts.

Half shafts

31 The half shafts are fully floating incorporating a single constant velocity joint.

Hub drive arrangement

32 The hub drive arrangements are driving flanges splined to the half shafts with taper roller hub bearings.

Steering swivels

33 These are taper roller bearings with asbestos resin upper bearings.

Axle breathers

34 The axle breathers are flexible pipes starting from the axle tubes ending in the engine compartment. There are two breathers, one from each axle.

Rear Axle

35 The rear axle has two variants one for TUL and one for TUM and are as follows:

35.1 Rear axle (TUL). The assembly is made up of a two-piece pressed steel casing and 6mm (0.25 in) differential bowl.

35.2 Rear axle (TUM). The rear axle is made up of a rigid two piece pressed steel casing with a single heavy gauge steel stiffener on the underside and 6mm (0.25 in) differential bowl.

Hub driving arrangement

36 The hub driving arrangement is via a hub-driving member splined to the half shafts with taper roller hub bearings.

BODY

37 The body is constructed from pressed and folded aluminium alloy panels, spot welded or riveted. The scuttle, door frames and other minor items are made from steel.

Windscreen

38 The windscreen is made up of a one-piece laminated glass.

Bonnet

39 The bonnet is constructed from aluminium alloy sheet with steel stiffeners. It is fitted with a central retaining device, a safety catch and an external release mechanism.

Spare wheel stowage

40 Two spare wheel stowages are provided:

40.1 The spare wheel stowage is located on the bonnet for emergency use only.

40.2 This is when the wheel cannot be stowed on the side of the vehicle for any particular reason.

40.3 The spare wheel stowage for other than above (Para 40.2) is located on the opposite side to the driver, and is secured to a mounting bracket, which is bolted to the roll cage.

40.4 The spare wheel is secured to either stowage position by two bolts.

Cab doors

41 The cab doors are constructed from aluminium alloy panels with a one-piece steel frame and fittings hung on two hinges. The upper door assembly is removable at waist level.

Door locks

42 The doors are fitted with direct action anti-burst door locks complete with a private lock set and adjustable striker plates.

Door windows

43 The door windows are made up of two-piece sliding section, of toughened glass, and are lockable in the closed position.

Scuttle

44 The scuttle divides the engine bay from the driving/passenger compartment. It is constructed from mild steel with impact surfaces designed for collapsibility and are padded. The ventilators are pivoted adjustable flaps ducted to face level outlets and are fitted with gauze fly screens.

Radiator mounting and grille

45 The radiator is rubber mounted to the chassis/body and is protected by a black plastic moulded grille.

Front wings

46 The front wings are made from aluminium alloy sheet with flat tops and steel curved inner wheel valances. Tops are reinforced to permit the fitting of TUUAM.

Bodyside and rear quarters

47 The body side and rear quarters are constructed from aluminium alloy with steel cappings.

Jerry can stowages

48 On TUM vehicles only, jerry can stowages have been built into the bodysides. The stowages are of alloy and steel construction with lockable aluminium alloy doors. The doors have a provision for padlocks.

Bulkhead

49 The bulkhead separates the driver/passenger compartment from the load compartment of the vehicle. It is constructed from aluminium alloy with steel cappings and is permanently secured into position.

Small arms clip

50 Mounted within the cab area are two sets of small arms clips. The clips are positioned for easy access.

Floor

51 The floor is constructed from aluminium alloy sheet panelled, braced underframed and rigidly attached to the chassis frame. Riveted to the floor are two full-length galvanised steel wear strips.

ELECTRICAL SYSTEM

52 The electrical system is charged by the vehicle alternator to 24 volts rectified AC negative earth with voltage compensation and ducted breathing to control water ingress. The charging control and rectifier are integral with the alternator. The system feeds all the vehicles' electrical requirements.

Alternator

53 The alternator is a 24 volt charging system with a 50 Ampere nominal output.

Fuses

54 There are two fuse boxes, a master fuse box, which is located in the engine compartment, and a subsidiary fuse box located in the fascia. There are 3 fuses in the master box and 17 in the subsidiary box which protect the vehicle circuits.

Batteries

55 The vehicle batteries are of the low maintenance type with special airportable filler caps wired in series to supply 24 volts.

Lights

56 The vehicle lights are of the commercial type and are controlled by the main lighting switch which governs whether the vehicle is in normal lighting or blackout.

FUEL SYSTEM

57 The fuel system consists of the fuel tank feeding through a sedimenter to a fuel lift pump and fuel filter located in the engine compartment, then to the engine.

Fuel lift pump

58 The engine mounted mechanical fuel lift pump is a self-priming unit and does not need any attention. The pump draws fuel up to the engine from the tank.

Fuel sedimenter

59 The fuel sedimenter is to allow excess water to be collected and, at periodic intervals, drained away to atmosphere.

Fuel filter

60 The fuel filter is a full-flow unit and contains a renewable canister. The filter cleans the fuel and collects any foreign bodies found in the fuel.

ENGINE COOLING SYSTEM

61 The cooling system is located inside the engine compartment and comprises the expansion tank connected to the radiator by way of the engine.

Expansion tank

62 The expansion tank is located on the right hand side wing valance and allows the coolant to expand when it gets hot. This prevents the system from being over pressurised.

Radiator

63 The radiator is vaned so that air can pass through, allowing the heated fluid that has circulated through the engine to cool down.

INFRARED LIGHTING SYSTEM

64 The Infrared lighting system when used in conjunction with appropriate Infrared goggles provides short range visibility enhancement at night. The system consists of front and rear light units and a dash mounted control panel.

CHAPTER 1-2

FITTED FOR RADIO

CONTENTS

Para

1 Introduction
2 Electrical system
3 Alternator (FFR)
4 Radio equipment
5 Radio table and battery box
6 Radio equipment rack
7 VHF antenna leads, TUAAM mountings and stowage
8 Antenna mast mountings
9 Battery isolation switch and power import export system.

Fig		Page
1	Truck Utility Light (Fitted For Radio)	3
2	Truck Utility Medium (Fitted For Radio)	5
3	Under the bonnet layout	6
4	Inside the rear of the vehicle	7
5	Battery isolation switch and power import/export system	9/10

INTRODUCTION

1 This sub-chapter describes all the items applicable to the Fitted For Radio (FFR) TUL and TUM vehicles which have not been covered in sub-chapter 1-1.

KEY TO FIG 1

1	Bumperettes
2	Rear stop lights
3	Rear number plate light
4	Radio aerial mounting base
5	Spare wheel
6	Convoy flag holder
7	Air intake
8	Side repeater lights
9	Aerial coaxial stowage
10	Door handle
11	Fuel cap
12	Windscreen wipers
13	Shovel
14	Front side lights
15	Headlights
16	Turn lights
17	Oil cooler
18	Front towing pintle
19	Convoy flag holder
20	Pick head
21	Door mirrors
22	Helve
23	Rear side light
24	Reverse light
25	12 pin trailer socket
26	Rotating towing hook
27	Turn lights
28	Rear fog lights

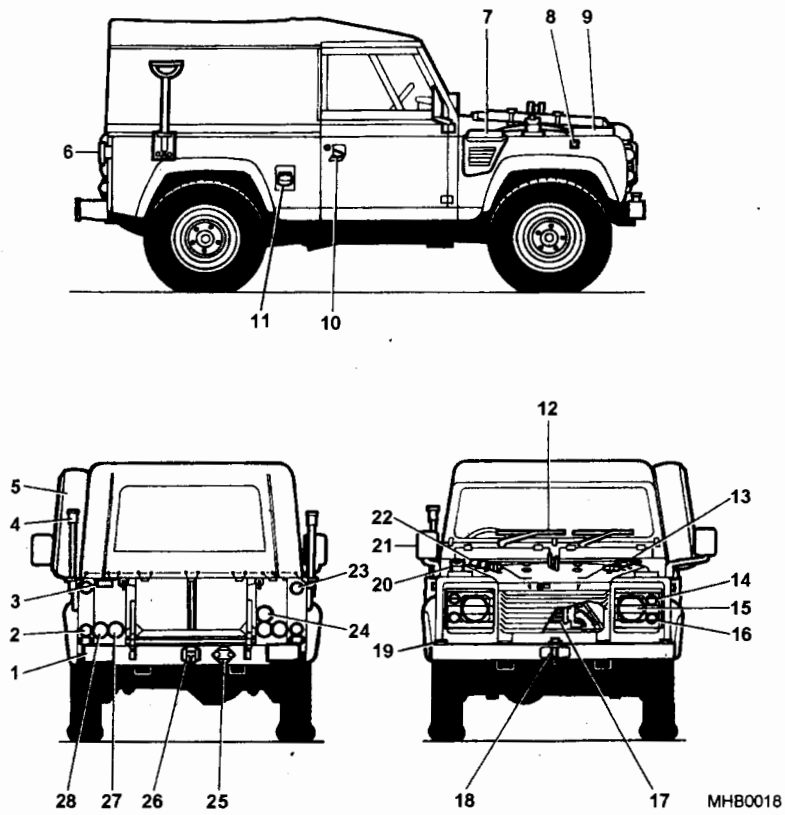

Fig 1 Truck Utility Light (Fitted For Radio)

KEY TO FIG 2

1	Bumperettes
2	Rear stop lights
3	Rear number plate light
4	Radio aerial mounting base
5	Spare wheel
6	Convoy flag holder
7	Air intake
8	Side repeater lights
9	Aerial coaxial stowage
10	Door handle
11	Jerry can holder
12	Fuel cap
13	Windscreen wipers
14	Shovel
15	Front side lights
16	Headlights
17	Turn lights
18	Oil cooler
19	Front towing pintle
20	Convoy flag holder
21	Pick head
22	Door mirrors
23	Helve
24	Rear side light
25	Reverse light
26	12 pin trailer socket
27	Rotating towing hook
28	Turn lights
29	Rear fog lights

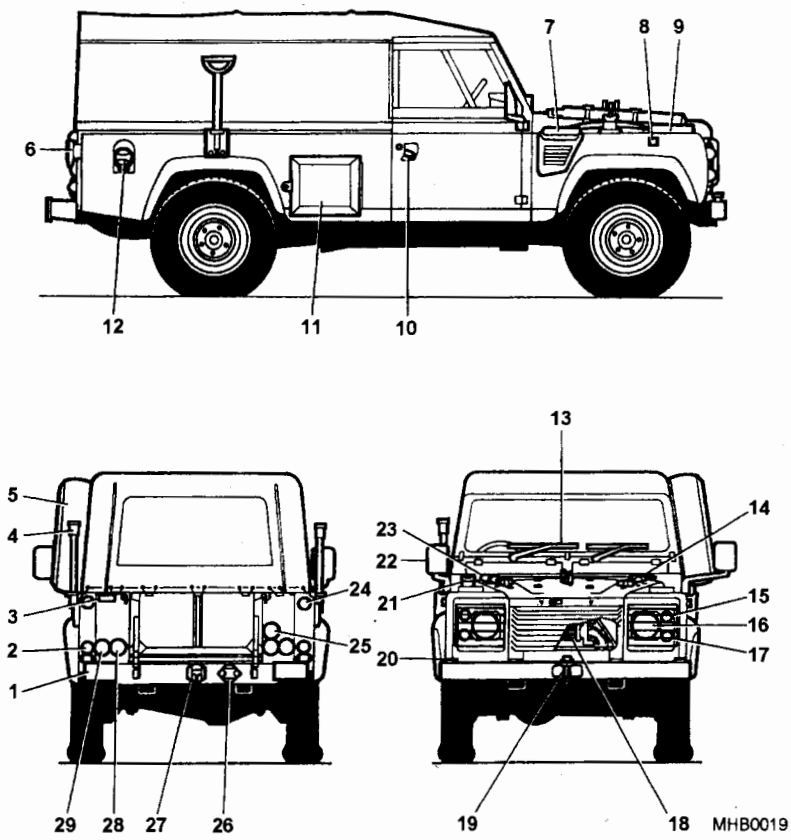
7
8
9
6
12
11
10
13
5
4
3
2
1
24
25
23
22
21
20
14
15
16
17
29
28
27
26
19
18
MHB0019

Fig 2 Truck Utility Medium (Fitted For Radio)

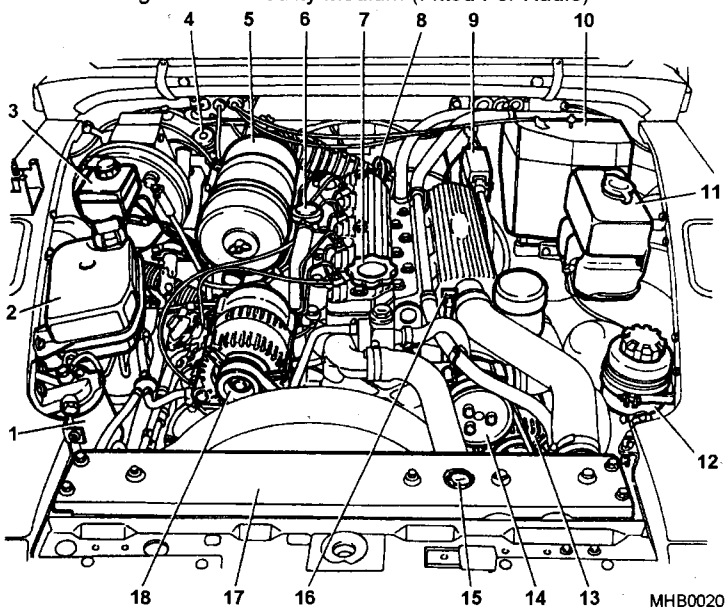

1	Fuel filter	10	Heater matrix
2	Expansion tank	11	Windscreen washer reservoir
3	Brake fluid reservoir	12	Power steering reservoir
4	Clutch fluid reservoir	13	50 Amp alternator
5	Air cleaner	14	Water pump
6	Crankcase breather	15	Radiator filler cap
7	Engine oil filler cap	16	Dipstick
8	Breather pipes	17	Radiator
9	Auxiliary fuse box	18	50 Amp alternator (FFR)

Fig 3 Under the bonnet layout

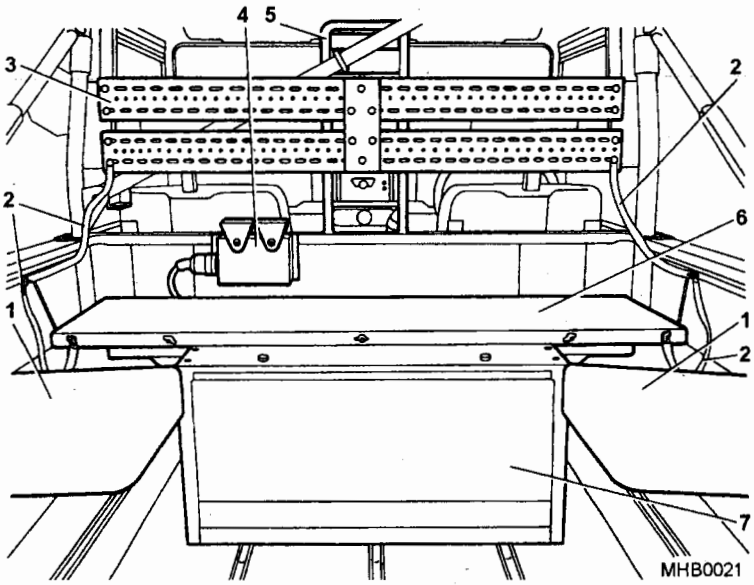

1	Radio seats	5	Small arms clip
2	Earthing braids	6	Radio table
3	Radio equipment rack	7	Battery stowage box
4	Terminal box		

Fig 4 Inside the rear of the vehicle

ELECTRICAL SYSTEM

2 A 24v 50 Amp alternator charges the auxiliary electrical system. The system feeds the vehicles' radio equipment via an in-line fuse to a terminal/shunt box mounted on the rear of the bulkhead. FFR vehicles have an additional charging system to supply radio equipment. The two systems operate independently of each other but can assist one another when required. A control box is required to enable the load sharing facility to take place.

Alternator (FFR)

3 The alternator charging system provides a 24 volt, 50 Ampere nominal output.

RADIO EQUIPMENT

4 The radio equipment is made up of the following items:

Radio table and battery box

5 A combined radio table and battery box capable of accepting five sets of Clansmen mounting bars is fitted transversely across the vehicle behind the bulkhead. The unit has provision for up to four batteries to be stowed to operate the radio sets.

Radio equipment rack

6 The radio equipment rack is made up of two galvanised slotted angle brackets mounted transversely across the vehicle above the bulkhead.

VHF antenna leads, TUUAM mountings and storage

7 Two leads run from the TUAAM mountings and stowage boxes on each wing to the stowage boxes mounted on the front of the bulkhead directly behind the front seats.

Antenna mast mountings

8 The two brackets, one on each side of the vehicle, are for the VHF antenna mast mountings. The brackets can be detached to give a minimum width for air transportation.

Battery isolation switch and import/export system

9 The power import/export system provides an interface between the vehicles' charging system, communications batteries and the import export sockets.

9.1 The system allows the communications batteries to be charged by either the vehicle charging system or an external generator connected via the import socket (Fig 5 (8)). Power can also be exported from the vehicle charging circuit via the export socket (8).

9.2 Both the auxiliary terminals (5) and the power export socket can be disconnected quickly via the isolation switch (7) mounted on the roll cage. In the event that the external generator is disconnected or stops, the system reverts to the vehicle charging system.

9.3 Mounted on the top of the relay box (6) are two circuit breakers for the protection of the auxiliary terminals (100A) and the power export socket (40A).

9.4 A warning buzzer (2) and test button (1) is provided to prevent the communications batteries from being connected incorrectly after the refitting of the batteries.

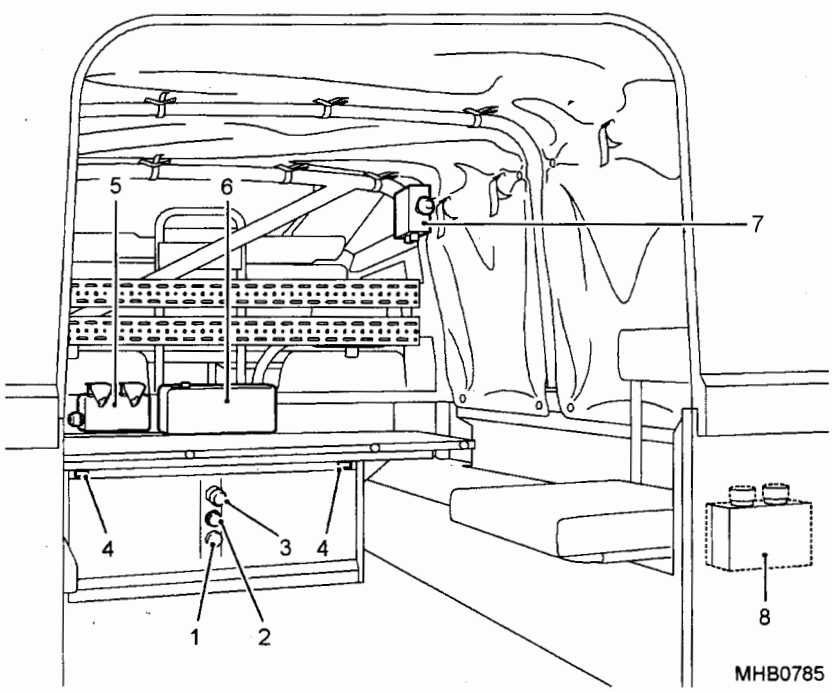

1	Test button	5	Auxiliary terminal box
2	Warning buzzer	6	Relay box
3	Positive battery lead stowage post	7	Battery isolation switch
4	Negative battery lead stowage label	8	Power import/export box

Fig 5 Battery isolation switch and power import/export system

CHAPTER 1-3

FIELD AMBULANCE

CONTENTS

Para

1 Introduction
2 Primary role
3 Secondary role
4 Technical data
5 Warning Labels
6 No smoking or naked lights
7 Oxygen
8 Upper stretcher mechanism
Warning label
Caution label
9 Upper stretcher lock mechanism
10 Stowing strut warning label
11 Emergency exit
12 Rear step
13 Heater start-up label
14 Heater operation labels
15 Chassis
Body
16 Cab
17 Bonnet
18 Spare wheel stowage
19 Ambulance compartment
20 Doors
21 External door
22 Stretcher support frames
Lower frame
Upper frame
23 Seats
24 Stretchers
25 Blankets
26 Attendants' seat
27 Infusion bottle racks
28 Resuscitator sockets
29 Oxygen bottle stowages

(continued)

CONTENTS (continued)

30 Oxygen sockets
31 Small arms stowage
32 Rear step
33 Heater
34 External jerry can stowages
35 Bulkhead
36 Stowages in cab
37 Rifles
38 2Kg fire extinguisher
39 Convoy flag pole
40 Breakdown equipment
41 Personnel kit
42 Floor
43 Red crosses
44 Electrical system
45 Circuit breakers
46 Run engine device
49 Rotating beacons
50 Ambulance compartment lights
Fluorescent rooflights
Blackout moonlight
Inspection light
Flood light
51 Distribution/control box
52 Heater control switch
53 Lighting control switch

Fig		Page
1	No smoking label	4
2	Oxygen label	5
3	Upper stretcher mechanism warning label	6
4	Upper stretcher mechanism caution label	6
5	Upper stretcher lock and stowing strut warning labels	7
6	Emergency exit label	8
7	Rear step label	9
8	Heater start-up and operation labels	10
9	Seat locking identifying label	11
10	Equipment location (Exterior)	13
11	Under the vehicle	15
12	Vehicle dash layout	17
13	Equipment location (Interior)	19

INTRODUCTION

1 This sub-chapter describes all the items applicable to the Field Ambulance and identifies equipment locations.

PRIMARY ROLE

2 In its primary role the vehicle allows the transportation of four persons on stretchers. The stretchers are strapped to upper and lower stretcher support frames in the ambulance compartment at the rear of the vehicle. Provision is made in the ambulance compartment for the stowage of oxygen, resuscitators and other designated items of medical equipment. A single seat is also provided in the ambulance compartment for use by a medical attendant.

SECONDARY ROLE

3 When required, the upper stretcher support frames can be stowed against the walls of the ambulance compartment. This then allows six seats to be available for use by personnel/patients.

TECHNICAL DATA

4 The technical data for the vehicle is as follows:

Length	5194 mm (204.5ins)
Width	2160 mm (85 ins)
Height (unladen)	2760 mm (108.5 ins)
Track (front and rear)	1521 mm (59.9)
Gross Vehicle Weight (GVW)	[redacted]
Fuel capacity	82 litres (18 gals)

Fig 1 No smoking label

WARNING LABELS

5 There are, inside the ambulance, labels of various kinds.

No Smoking or naked lights

6 Located on the bulkhead above the ventilator deflectors (Fig 1). This is to inform that there are highly inflammable substances within the close confines of the vehicle.

Oxygen

7 Located on either side of the bulkhead door adjacent to the oxygen outlets (Fig 2). This is to ensure that the connectors are not contaminated with oil or grease

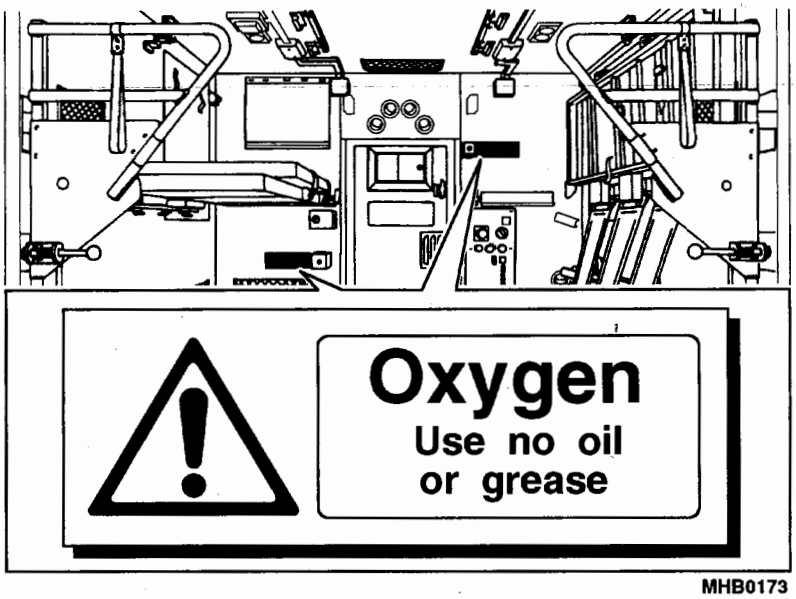

Fig 2 Oxygen label

Upper stretcher mechanism

8 There are two labels - one is a warning and the other a caution as follows

8.1 Warning label. To prevent personal injury when deploying upper stretcher mechanism (Fig 3).

8.2 Caution label. To prevent fouling of mechanism when raising\lowering stretcher mechanism (Fig 4).

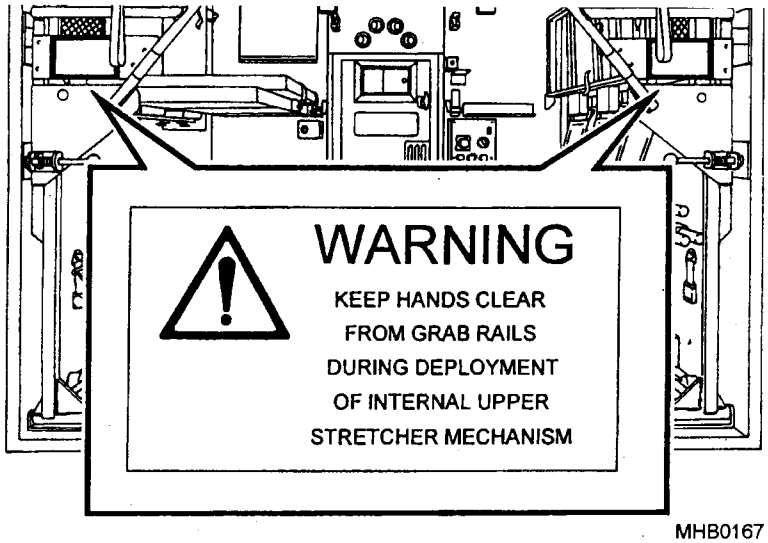

Fig 3 Upper stretcher mechanism warning label

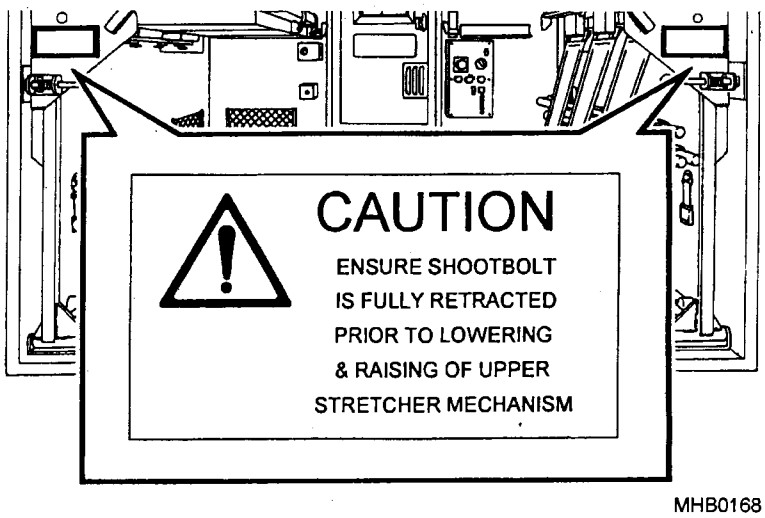

Fig 4 Upper stretcher lock mechanism caution label

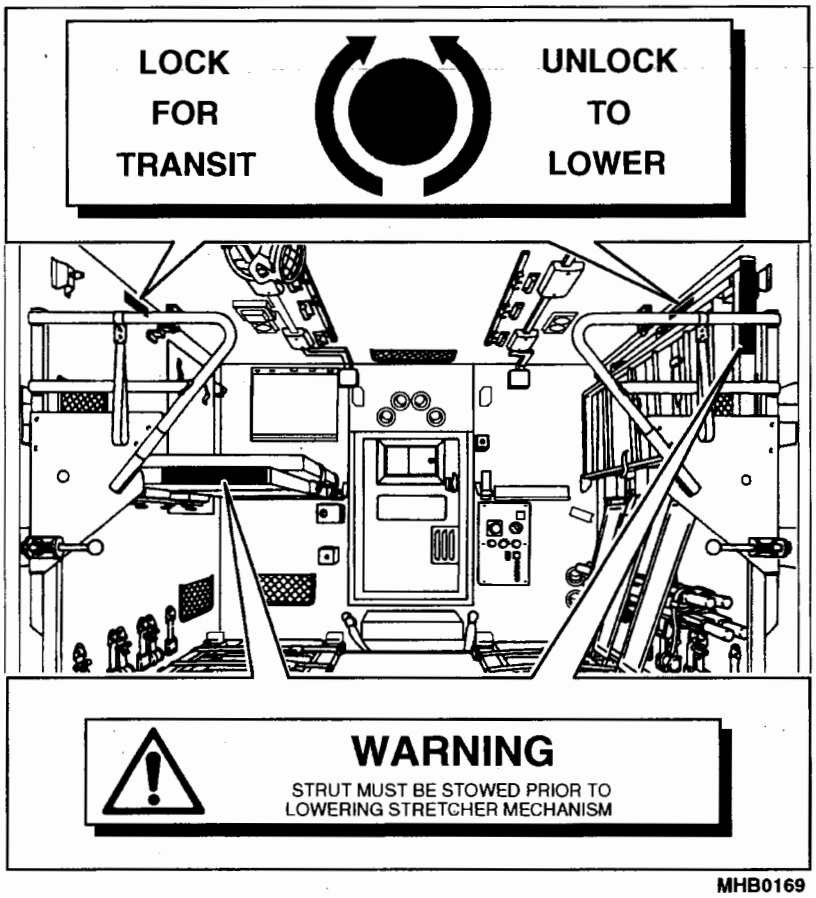

Fig 5 Upper stretcher lock and stowing strut warning labels

Upper stretcher lock mechanism

9 To ensure that equipment is released correctly and safely (Fig 5).

Stowing strut warning label

10 The label is to prevent the strut from being damaged when lowering the upper stretcher mechanism (Fig 5).

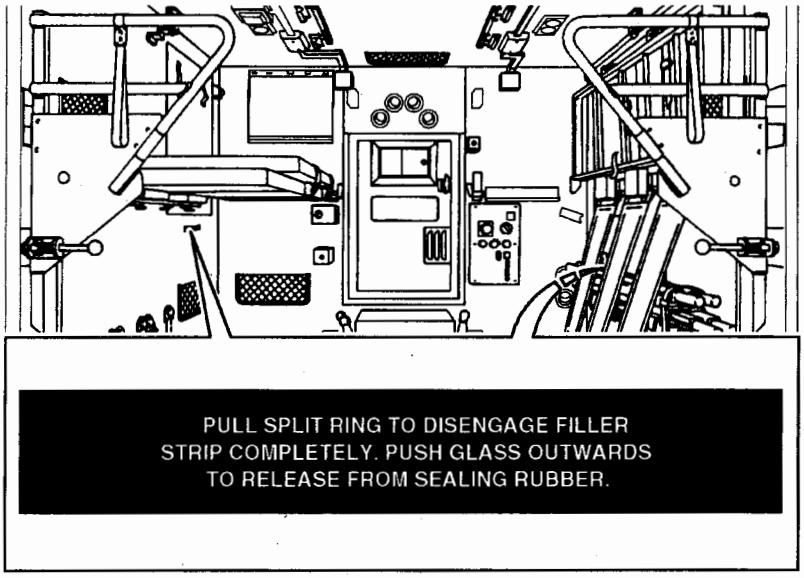

MHB0170

Fig 6 Emergency exit label

Emergency exit

11 To inform passengers of the correct operation in the need of emergency evacuation (Fig 6).

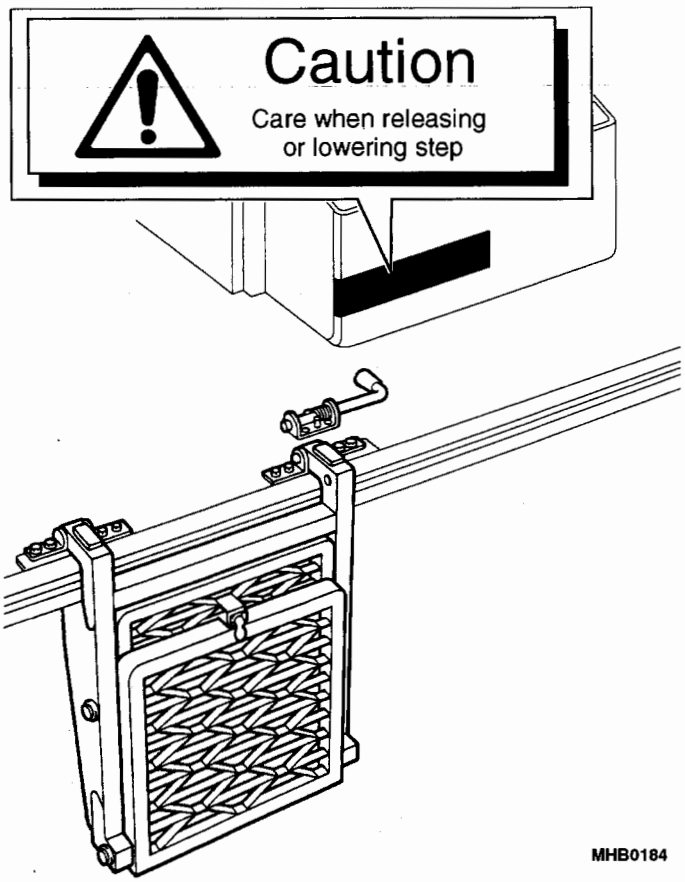

Fig 7 Rear step label

Rear step

12 Located on the front of the stretcher base, it is to prevent personal injury when lowering step (Fig 7).

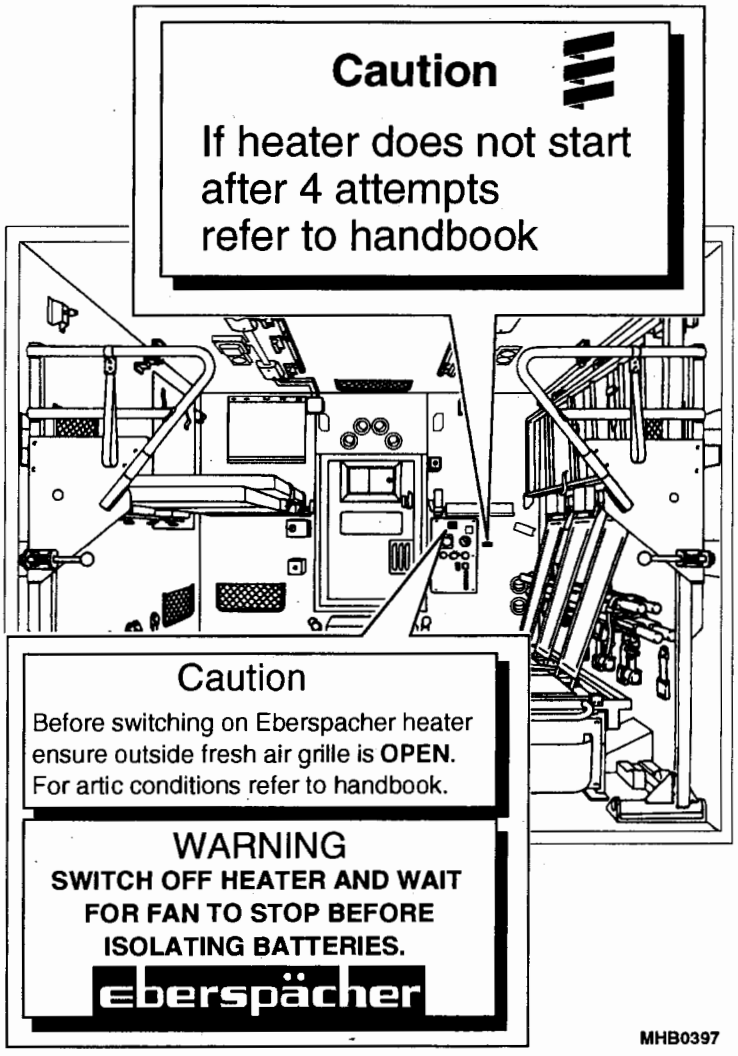

Fig 8 Heater start-up and operation labels

Heater start-up label

13 The label (Fig 8) is to prevent the heater from being locked out after four (4) attempts (refer to Chap 2-3)

Heater operation labels

14 There are two labels (Fig 9) situated on the control panel, which gives information about starting and closing down of the heater.

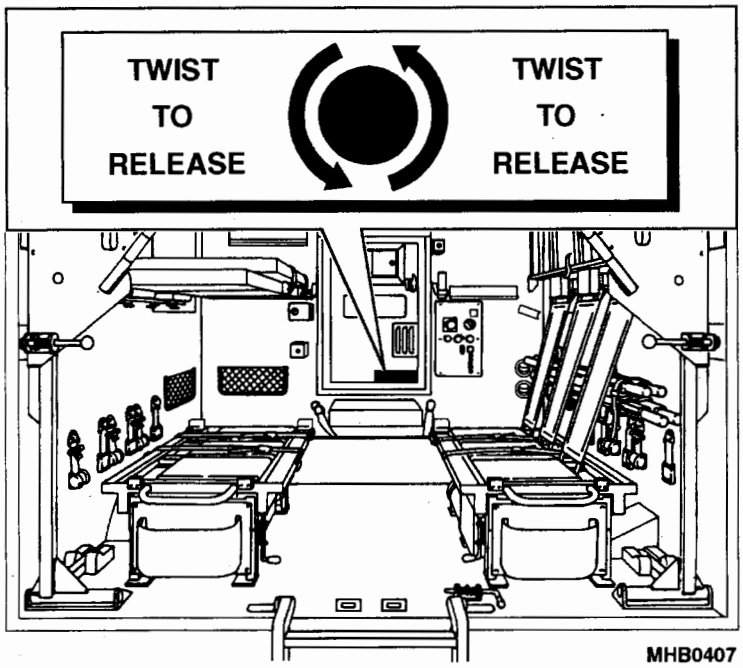

Fig 9 Seat locking identifying label

KEY TO FIG 10

1	Ventilator
2	Side window - ambulance compartment
3	Blue flashing beacon
4	Roof Ventilation unit
5	Side repeater
6	Spare wheel secondary stowage
7	Air intake
8	Door handle
9	Heater air intake grille
10	Jerry can stowage
11	Fuel filler cap
12	Rear window
13	Spare wheel
14	Rear door handle
15	Red cross
16	Step (roof access)
17	Grab handle
18	Windscreen wipers
19	Shovel
20	Gearbox oil cooler
21	Front towing pintle
22	Bonnet release catch
23	Convoy flag holder - front
24	Front turn light
25	Side light
26	Head light
27	Pick head
28	Helve
29	Siren
30	Rear view mirror
31	Convoy flag holder - rear
32	Reflector
33	Reversing light
34	Rear number plate light
35	Fog light
36	Rear turn light
37	Stop light
38	Tail light

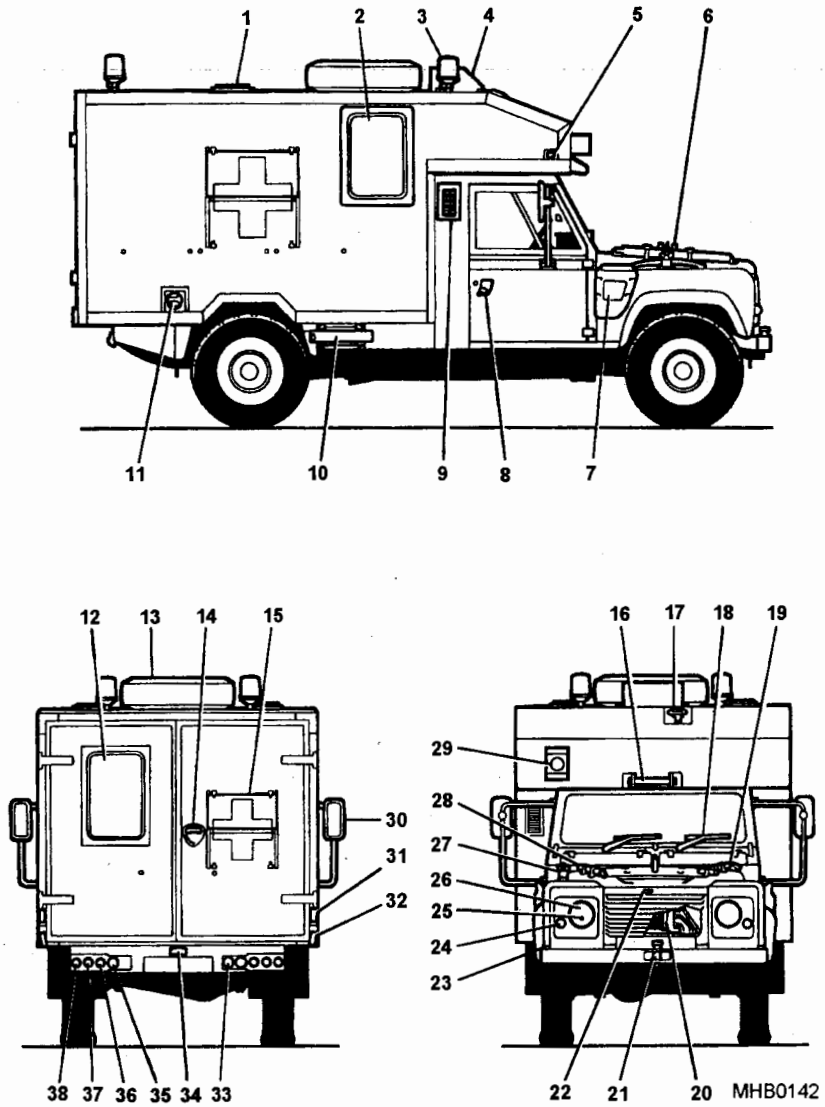

Fig 10 Equipment location - Exterior

KEY TO FIG 11

1	Front towing pintle
2	Front tie-down shackles
3	Steering protection plate
4	Front axle breather
5	Engine sump
6	Engine oil filter
7	Exhaust pipe
8	Rear axle breather
9	Anti-roll bar
10	Rear tie-down shackles
11	Rear lashing/towing eyes
12	Fuel tank
13	Fuel filler pipe
14	Convoy light
15	Rear brakes
16	Rear differential
17	Rear propeller shaft
18	Fuel sedimenter
19	Transmission brake drum
20	Transfer gearbox
21	Main gearbox
22	Front propeller shaft
23	Anti-roll bar
24	Steering protection bracket
25	Front brake and swivel pin housing
26	Front differential
27	Steering box
28	Front bumper

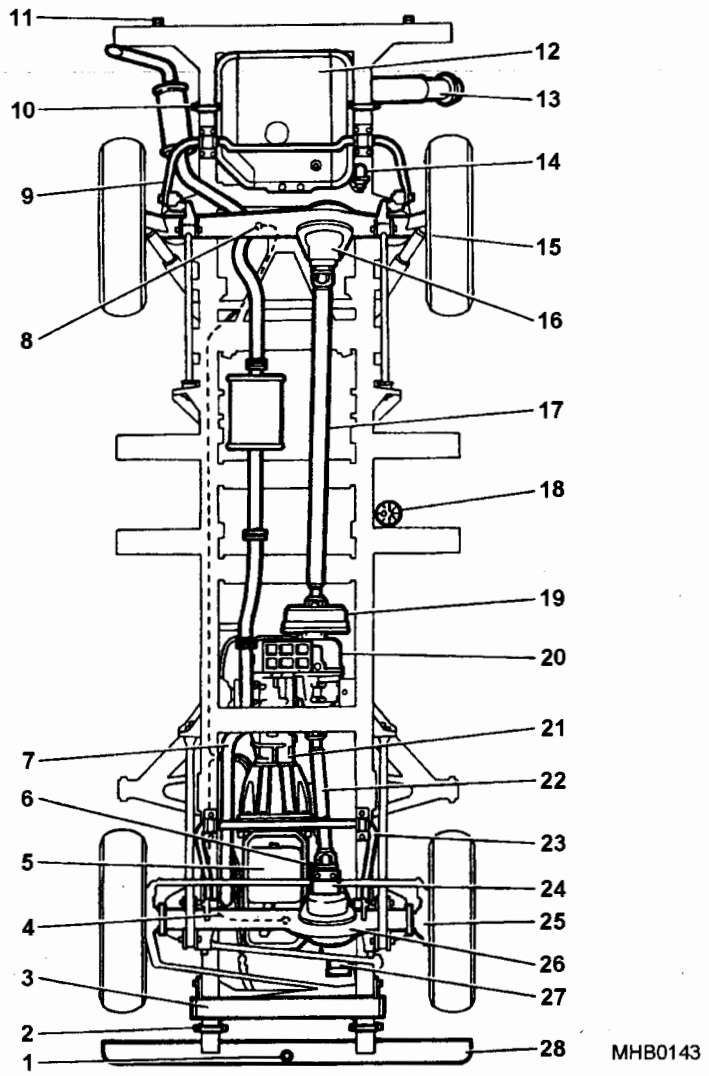

Fig 11 Under the vehicle

KEY TO FIG 12

1	Map reading light
2	Ventilator control
3	Main lighting switch
4	Inspection light sockets
5	Blue flashing beacon switch
6	Two-tone horn switch
7	Headlight dip, direction indicators, horn and flasher switch
8	Speedometer
9	Fuel indicator
10	Coolant temperature indicator
11	Interior light switch
12	Warning lights panel
13	Temperature control lever
14	Distribution control
15	Windscreen wash/wipe switch
16	Hazard warning switch
17	Rear fog guard light switch
18	Levelling switch
19	Accelerator pedal
20	Brake pedal
21	Starter switch
22	Clutch pedal
23	Heater fan control
24	Hand brake
25	Transfer gear/differential lock lever
26	Main gear change lever
27	Fuse box
28	Footwell air vent

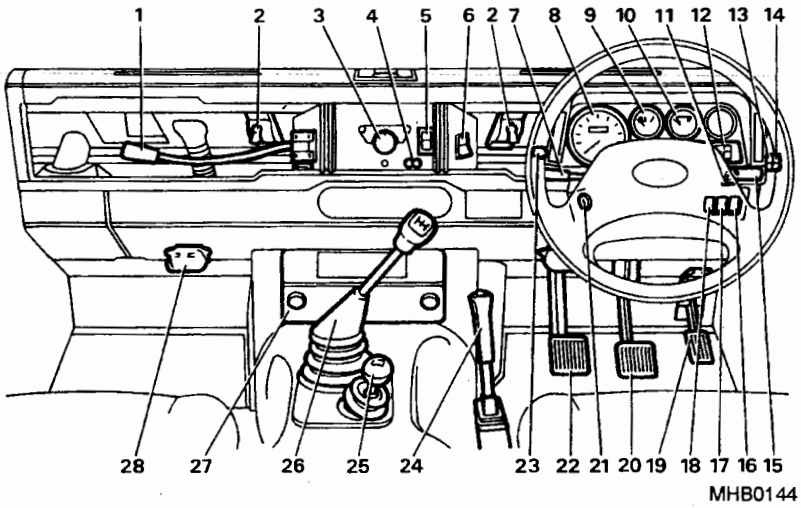

Fig 12 Vehicle dash layout

KEY TO FIG 13

1	Pivoting gate - LH	27	Seat pads
2	Flood light socket	28	Pivoting gate gas strut - RH
3	Moonlight	29	Stowage compartment
4	Flood light	30	Lower stretcher catch - RH
5	Stowage compartment	31	Drop down step catch
6	Upper stretcher catch	32	Drop down step
7	Luggage net	33	Stowage compartment
8	Ventilator deflectors	34	Oxygen cylinder
9	Walk through door	35	Upper stretcher catch
10	Infusion bottle tracks	36	Attendants seat
11	Grab handles	37	Oxygen cylinder
12	Fluorescent light	38	Oxygen socket
13	Vent grille	39	Stowage compartment
14	Upper stretcher frame - RH	40	Pivoting gate gas strut - LH
15	Small arms clip	41	Lower stretcher support frame - LH
16	Pivoting gate - RH	42	Lower stretcher frame - LH
17	Oxygen socket	43	Inertia reels
18	Side window blind	44	Stowage nets
19	Head rest	45	Pivoting gate shoot bolt - LH
20	Distribution control panel	46	Attendants headrest
21	Pivoting gate shoot bolt - RH	47	12v & 24 v resuscitator sockets
22	Directional ventilators	48	Upper stretcher support frame
23	Back supports	49	Side window blind
24	Stretcher stowage	50	Pivoting gate pull down strap
25	Heater compartment	51	Upper support frame catch
26	Lower stretcher frame - RH	52	Buffer

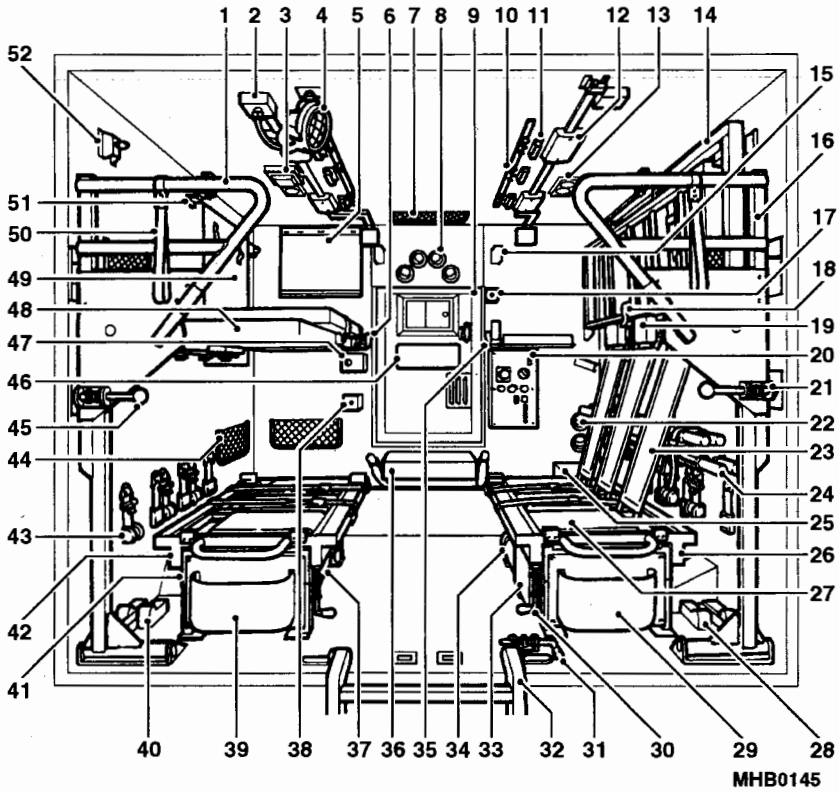

Fig 13 Equipment location (Interior)

CHASSIS

15 The chassis is made up of two welded box section side members with closed channel section cross members, with a detachable tubular cross-member.

BODY

Cab

16 The cab is constructed from pressed and folded aluminium alloy panels, spot welded or riveted. The scuttle, door frames and other minor items are made from steel.

Bonnet

17 The bonnet is constructed from aluminium alloy sheet with steel stiffeners and is fitted with a central retaining device and a safety catch. The bonnet has a walk-on facility and also provides a secondary stowage for the spare wheel.

Spare wheel stowage

18 The spare wheel primary stowage is located on the ambulance compartment roof behind the ventilation unit. The wheel is secured to a roof-mounted bracket by two bolts and an annular ring. A secondary stowage for the spare wheel is located on the bonnet.

AMBULANCE COMPARTMENT

19 The ambulance compartment is mounted on the chassis and comprises of a box structure, which extends over the cab. The structure is formed from extruded aluminium sections, the roof, sides and floor panels, which are riveted together. Each side panel is fitted with a fixed window, which can be jettisoned to allow emergency egress.

19.1 Internally the compartment provides:

19.1.1 Stretcher support frames

19.1.2 Seats (secondary role)

19.1.3 Stretchers

19.1.4 Blankets

19.1.5 Attendants' seat

19.1.6 Infusion bottle holder tracks

19.1.7 Resuscitator sockets

19.1.8 Stowage compartments

19.1.9 Oxygen bottle stowage

19.1.10 Small arms stowage

19.1.11 Rear step

19.1.12 Heater

19.1.13 Lighting (para 48)

19.1.14 Distribution/control box (para 49)

Doors

20 The compartment is closed at the front by a bulkhead door and at the rear by hinged double doors.

External door

21 Normal access to the ambulance compartment is at the rear through the hinged double doors. These open outwards and swing round though 270 degrees to the sides of the vehicle. The RH door is fitted with an internal and external handle, which can be locked with a key. The LH door is fitted with an internal handle only. A microswitch is attached to the roof and controls the operation of ambulance compartment lighting when the blackout facility is in use (para 51).

Stretcher support frames

22 There are four stretcher support frames, two lower and two upper.

22.1 Lower frame. Each lower frame is constructed from welded, aluminium extrusions and comprises a fixed inner frame and a sliding outer frame. The fixed frame is bolted to the floor and incorporates runners at the sides. The sliding outer frame is located on top of the fixed inner frame and moves on rollers located within the runners; a catch locks the outer frame in position. A grab handle is provided on the sliding outer frame to enable the frame to be pulled rearwards.

22.2 Upper frame. The upper frames are also constructed from welded, aluminium extrusions and comprise of fixed and sliding frames. The frames are supported; on a transverse mounting at the bulkhead and at the rear, on a pivoting frame and gate assembly. A gas strut is attached to the pivoting frame, via a link at one end and bolted to the vehicle at the other, providing a smooth, controlled operation when the frames are being used. The frames are locked in the used position by a retaining catch on the bulkhead. When not in use the stretchers can be stowed in the upright position against the side of the body. When the pivoting gate catch is released the assembly can

be pulled outwards and downwards to permit stretcher loading/unloading. When the frames are stowed away the seats can be used.

Seats

23 Seat pads are provided at six positions and can be used when the upper stretcher frames are stowed. An inertia reel lap strap is attached to the wall adjacent to the seat. Back support is provided by a flexible material which is attached to the underside of the upper stretcher support frames. When not in use the back supports are stowed under the seat pads.

Stretchers

24 In its primary role the stretchers are located on each of the lower and upper support frames. Each stretcher is retained by the same spring-pin which is used for preventing the frames from sliding apart. When the seats are in use, two stretchers are folded and stowed on either side, behind the back supports, on two sets of support brackets, one on either side.

Blankets

25 Blankets are stowed underneath and in front of the left hand side lower stretcher frame.

Attendants' seat

26 An attendants' seat is located against the bulkhead. The seat lifts up providing access to storage space underneath it. The space is used for the storage of equipment and kit. A two-point lap belt for use by the attendant is fitted to the bulkhead.

Infusion bottle tracks

27 Two infusion bottle tracks are fixed to the roof; each comprising of a rail incorporating three sliding holders to which infusion bottles are attached.

Resuscitator sockets

28 There are four resuscitator socket outlets, two 12volt and two 24 volt, in the ambulance compartment; one of each type are located on the auxiliary panel to the left of the walk through door bulkhead and also in the distribution/control box.

Oxygen bottle stowages

29 These are located on the floor of the compartment under the stretcher frames. The stowages comprise of two support brackets and straps, which hold and retain a single oxygen cylinder.

Oxygen sockets

30 Located on the bulkhead are two oxygen sockets one on either side of the walk through door. The left-hand socket is located at the lower level and the right-hand socket at the upper level adjacent to the stretchers.

Small arms stowage

31 Provision is made for the stowage of SA.80 rifles on the left-hand side in front of the bulkhead.

Rear step

32 An aluminium, folding step is mounted at the rear of the vehicle just inside the doorway. When in use the step hinges down to rest against the rear of the vehicle. When not in use the step is folded up to a stowed position; it is held in this position by a spring-loaded pin.

Heater

33 Ambulance compartment heating is provided by an Eberspacher D5L air heater located in a compartment, with a screwed down cover, adjacent to the attendants' seat. The heater is a fuel burning unit and is controlled from a rotary switch located on the Distribution/Control box on the bulkhead.

EXTERNAL JERRY CAN STOWAGES

34 Two jerry can stowages are provided, one on either side of the vehicle, attached to the underside of the body forward of the rear wheels. Each stowage comprises a locker with a hinged retaining bar. Jerry cans slide into the lockers and are held in position by the retaining bars which are secured with a latch. The left hand stowage holds a 20 litre water jerry can while the right hand stowage holds a 20 litre fuel jerry can.

BULKHEAD

35 The bulkhead separates the driver/passenger compartment from the ambulance compartment. It is constructed from a three element, aluminium-foam-aluminium panel and incorporates a central walk-through door, which connects the two compartments. A microswitch attached to the doorframe controls operation of ambulance compartment lighting when using the blackout facility.

STOWAGES IN THE CAB

36 In the cab provision is made for the stowage of the following items of equipment:

Rifles

37 One rifle, held in clips on the front panel at the back of the left hand seat.

2 Kg fire extinguisher

38 Retained by a strap in a bracket located between driver's and passenger's seats.

Convoy flag pole

39 In clips behind the seats.

Breakdown equipment

40 The following items of breakdown equipment are also carried - Chocks, Jack, Jack handle, Towrope and IVSS lead.

Personnel kit

41 A stowage area is located at the right hand side of the cab above head height. Kit is prevented from falling out of this stowage area by means of a canvas cover clipped onto the roof.

FLOOR

42 The floor is constructed from three element, aluminium-foam-aluminium panels, reinforced and rigidly attached to the chassis frame. In the ambulance compartment the floor is protected with a vinyl, non-slip covering.

RED CROSSES

43 To identify the vehicle as an ambulance, red crosses are painted on the sides, rear and top of the vehicle.

43.1 Half of each red cross is painted onto a hinged panel which has two positions. In one position the red cross is exposed. In the other, the hinged panel is folded over and the red cross is obscured. The panel is held in either of the two positions by retaining catches.

ELECTRICAL SYSTEM

44 The electrical system is charged by the vehicle alternator to 24 volts rectified AC negative earth with voltage compensation and ducted breathing to control water ingress. The charging control and rectifier are integral with the alternator. The system feeds all the vehicle's electrical requirements.

Circuit breakers

45 There are five circuit breakers contained in the Distribution/Control box in the ambulance compartment. These breakers protect the ambulance compartment circuits as follows.

45.1 CB1 - Heater

45.2 CB2 - Blowers

45.3 CB3 - 12 volt socket

45.4 CB4 - Lights

45.5 CB5 - 24 volt sockets

Run engine device

46 A run engine device is mounted on a double relay bracket attached to the dash behind the fascia.

47 The run engine device senses low battery voltage and automatically operates the buzzer and 24V warning light to advise of the necessity to run the engine. This occurs when the battery voltage drops below 24.4 volts, due to extended use with the engine not running. The warning light illuminates and the buzzer sounds intermittently.

48 After the engine has been run, and battery voltage rises above 26 volts, the light extinguishes and the buzzer stops. Time for engine run is variable depending on current draw in the ambulance.

Rotating beacons

49 There are two rotating beacons mounted on the roof of the vehicle controlled from a rocker switch on the fascia.

Ambulance compartment lights

50 Lighting is provided in the ambulance compartment as follows:

50.1 Fluorescent roof lights. Four twin tube units, two on either side of the compartment. Supplied from the rotary lighting switch on the Distribution/Control box.

50.2 Blackout moonlight. Roof-mounted on the left side between the fluorescent lights. Supplied from the rotary lighting switch on the Distribution/Control box.

50.3 Inspection light socket. An inspection light socket is mounted on the control panel and is powered by a rocker switch adjacent to it.

50.4 Floodlight. Mounted on a swivel-bracket on the roof above the doorway at the rear of the compartment. The floodlight electrical plug connects to a roof-mounted socket supplied through the Distribution/Control box. A 10 metre extension lead for the floodlight is stowed underneath the lower RH stretcher frame.

Distribution/control box

51 This unit is mounted to the right side of the bulkhead adjacent to the attendants locker. The unit comprises a welded box assembly with a front panel. The front panel provides mountings for a casualty bag socket, a resuscitator socket, heater control switch, lighting control switch, inspection light switch and inspection light socket.

Heater control switch

52 This is an illuminated rotary switch with graduations marked from 0 to 4 set within coloured fields. The graduations and fields indicate the mode of operation - refer to Chapter 2-3 for full instructions.

Lighting control switch

53 Ambulance compartment lighting is controlled by this 4-position rotary switch. The switch is marked OFF/BLUE/BLACK-OUT/WHITE and supplies the roof-mounted fluorescent lights and the roof-mounted, blue, moonlight.

CHAPTER 1-4

WINTERISED/WATERPROOF

CONTENTS

Para

1 Introduction
2 Warning labels
3 Damage limitation warning label

Fig		Page
1	Damage limitation warning label	2
2	Truck Utility Medium	3
3	Vehicle dash layout	5
4	Under the bonnet (GS)	6
5	Under the bonnet (FFR)	7
6	Rear bulkhead	8
7	Rear of the vehicle	9/10

INTRODUCTION

1 This sub-chapter describes all the items applicable to the Winterised/Water proof vehicles and identifies equipment locations.

WARNING LABELS

2 There are, around the vehicle, labels over and above that which are mentioned in the previous chapters. These appertain to the Winter/water vehicles.

Damage limitation warning label

3 This label (Fig 1) advises individuals not to grab hold of items to aid them to climb onto the vehicle due to incurring damage.

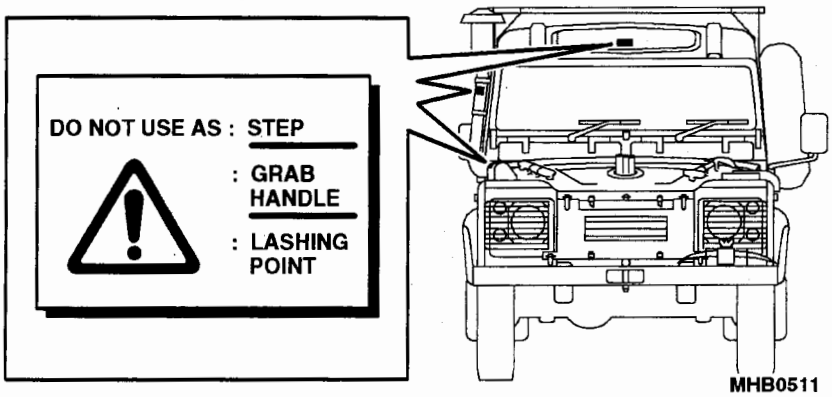

Fig 1 Damage limitation warning label

KEY TO FIG 2

1	TUUAM mounting	20	Pick axe handle
2	Side repeater	21	Front screen wiper
3	Raised air intake	22	Front screen wash
4	Snow blind	23	Escape hatch
5	Air cleaner	24	Shovel
6	Drain tap	25	Front side lights
7	Spare wheel	26	Indicator light
8	Aerial grommet	27	Pick axe head
9	Roof bar (Ski rack)	28	Radiator snow blind
10	Aerial mounting	29	Towing pintle
11	GRP hardtop	30	Headlight
12	Rear bumperettes	31	Rear stop light
13	Jerry can stowage	32	Reversing light
14	Door handle lock	33	Rear side light
15	Driving mirror	34	Rear indicator lights
16	Number plate light	35	Rear fog guard lights
17	Rear door lock	36	12 pin socket
18	Rear wiper	37	Towing hook
19	Rear wash	38	Convoy flag holder

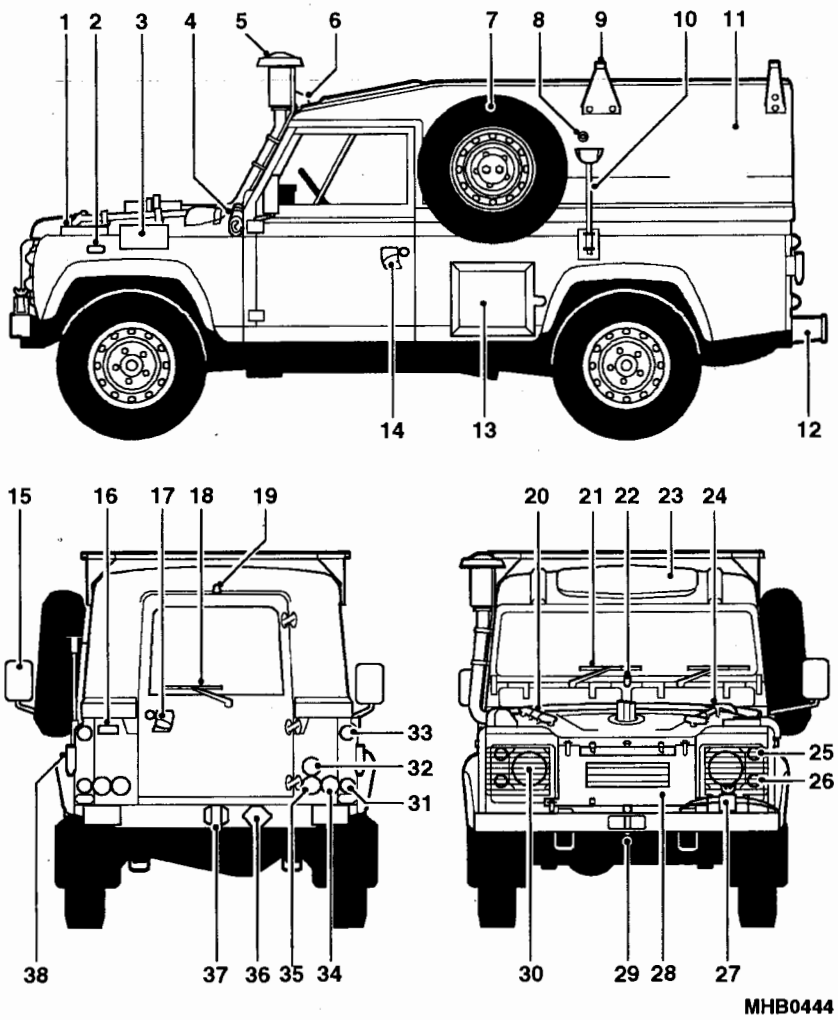

Fig 2 Truck Utility Medium

KEY TO FIG 3

1	Map reading light	17	Heater blower switch
2	Fuse box cover	18	Horn/dip/indicator switch
3	Centre console	19	Speedometer
4	Warning light panel	20	Fuel gauge
5	Main lighting switch	21	Temperature switch
6	Heater switch (Webasto)	22	Wash/wipe switch
7	Map reading light switch	23	Temp and distribution switch
8	Headlamp levelling	24	Accelerator pedal
9	Rear heated screen switch	25	Brake pedal
10	Front heated screen switch	26	Clutch pedal
11	Rear fog guard switch	27	Handbrake
12	Hazard warning switch	28	Hand throttle
13	Ignition switch	29	Main gearbox lever
14	Inspection sockets	30	Transfer/diff lock gearbox
15	Rear wash/wipe switch	31	Main fuse box
16	Air vent	32	heater footwell vents

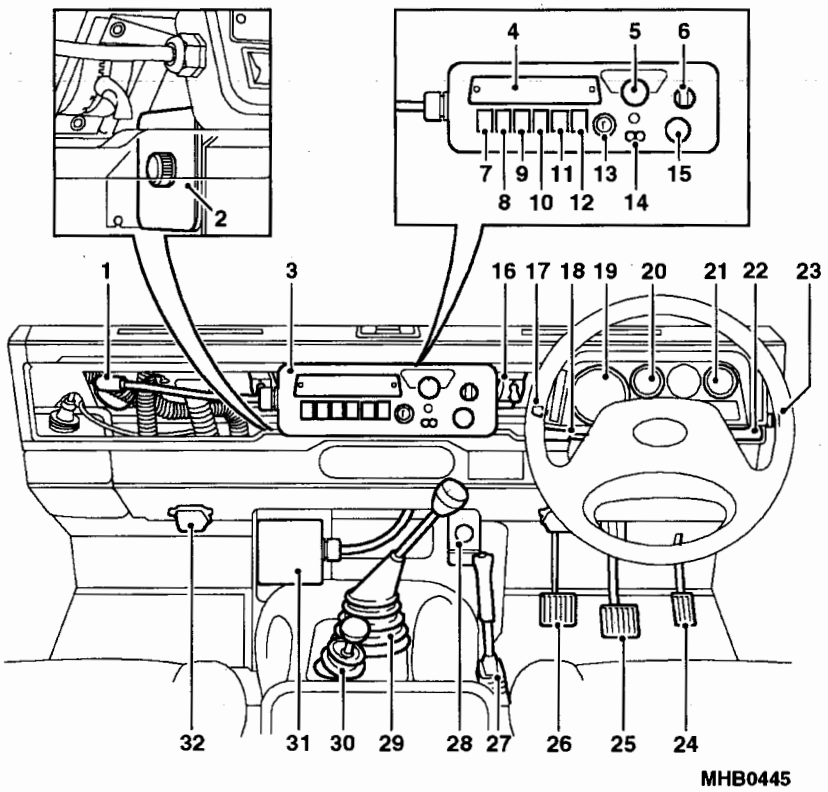

Fig 3 Vehicle dash layout

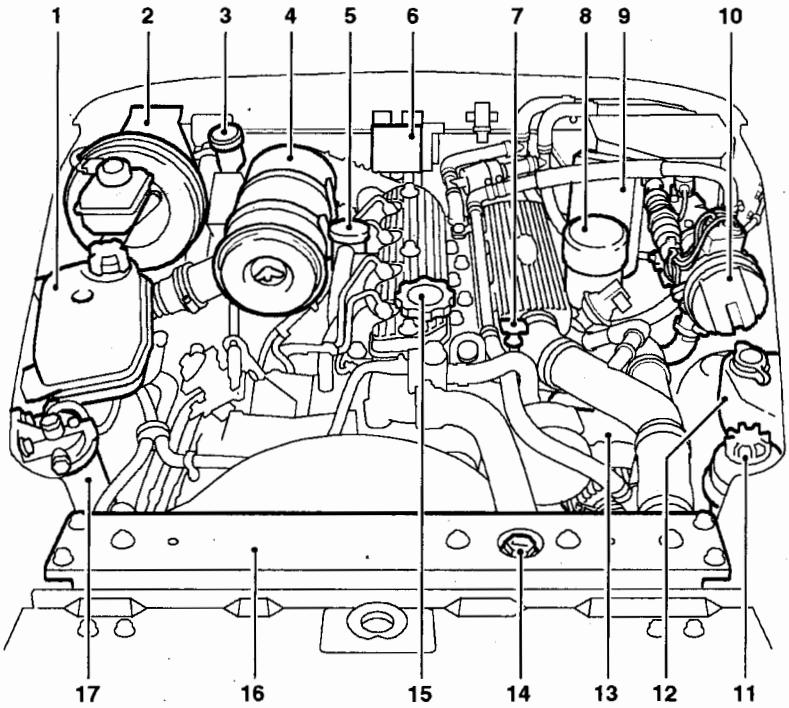

1	Engine coolant reservoir	10	Webasto water heater
2	Brake fluid reservoir	11	Power steering reservoir
3	Clutch fluid reservoir	12	Windscreen wash reservoir
4	Air cleaner	13	Alternator
5	Cyclone (crank breather)	14	Radiator filler
6	RFI filter	15	Engine oil filler
7	Engine oil dipstick	16	Radiator
8	Alternator breather	17	Fuel filter
9	Webasto heater ECU		

Fig 4 Under bonnet (GS)

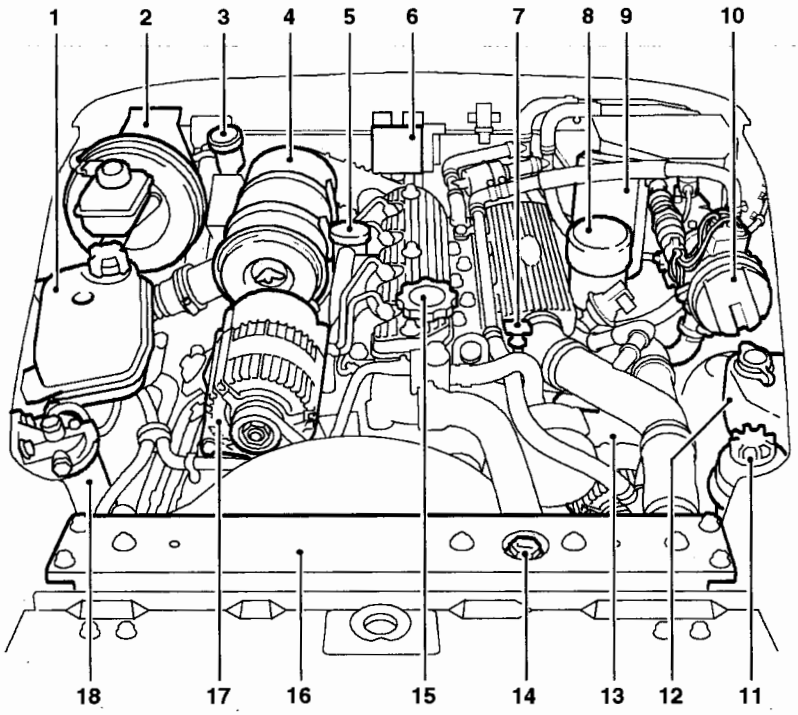

1	Engine coolant reservoir	10	Webasto water heater
2	Brake fluid reservoir	11	Power steering reservoir
3	Clutch fluid reservoir	12	Windscreen wash reservoir
4	Air cleaner	13	Alternator - lower
5	Cyclone (crank breather)	14	Radiator filler
6	RFI filter	15	Engine oil filler
7	Engine oil dipstick	16	Radiator
8	Alternator breather	17	Alternator - upper
9	Webasto heater ECU	18	Fuel filter

Fig 5 Under bonnet (FFR)

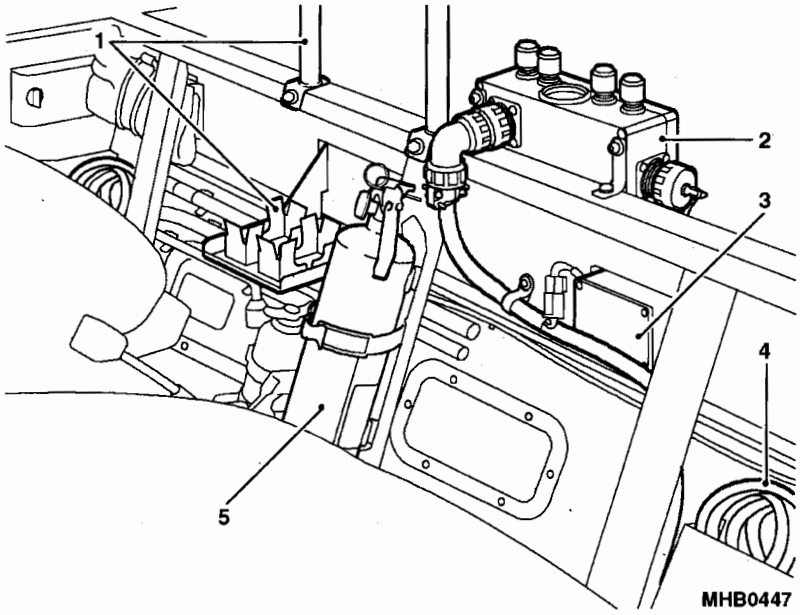

1	Gun clips	4	Coaxial cable (aerial)
2	Terminal box and Ammeter	5	Fire extinguisher
3	Radio charging circuit ECU		

Fig 6 Rear bulkhead

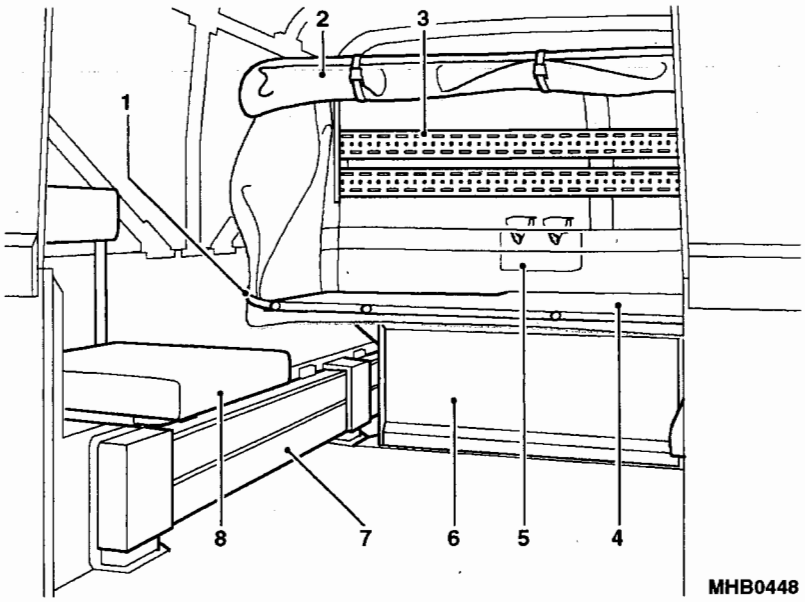

1	Earthing straps	5	Terminal box
2	Radio bag	6	Radio trays
3	Dexion racking	7	Heater radiators
4	Radio table	8	Radio operators seat

Fig 7 Rear of the vehicle

CHAPTER 1-5

WINTERISED

CONTENTS

Para

1 Introduction
2 General

INTRODUCTION

1 This sub-chapter describes all the items applicable to Truck Utility Light (TUL) HS and Truck Utility Medium (TUM) HS Winterised vehicles which are not covered in the previous chapters.

General

2 All information appertaining to the winterised vehicles can be found in sub-chapter 1-4 Winter/Water.

CHAPTER 1-6

AIR DROP

CONTENTS

Para

1 Introduction
2 General

INTRODUCTION

1 This sub-chapter describes all the items applicable to Truck Utility Light (TUL) HS Air drop vehicles, which are not covered in the previous chapters.

General

2 All information appertaining to the air drop vehicles can be found in sub-chapter 1-1 Basic vehicle and 1-2 Fitted for Radio (FFR).

CHAPTER 1-7

HELICOPTER SUPPORT PLATFORM

CONTENTS

Para

1 Introduction
2 General

INTRODUCTION

1 This sub-chapter describes all the items applicable to the Truck Utility Medium (TUM) HS Helicopter Support Platform vehicles which are not covered in the previous chapters.

General

2 All information appertaining to the Helicopter support platform vehicles can be found in sub-chapter 1-1 Basic vehicle and 1-2 Fitted For Radio (FFR).

CHAPTER 1-8

COMMANDERS IK

CONTENTS

Para

1 Introduction
2 Warning Labels
3 Earth warning label
4 Voltage labels

Fig Page

1 Earth warning label 2
2 Voltage labels 3
3 Truck Utility Medium (Commanders IK) 5
4 Inside rear of vehicle 7
5 Rear bulkhead 8

INTRODUCTION

1 This sub-chapter describes all the items applicable to the Truck Utility Medium (TUM) HS Commanders IK vehicles, which are not covered in the previous chapters.

WARNING LABELS

2 There are, around the vehicle, labels over and above that which are mentioned in the previous chapters. These appertain to the Commanders IK vehicles.

Earth warning label

3 The earth warning label (Fig 1) advises individuals against connecting to an outside power supply without first earthing the vehicle.

Voltage labels

4 The voltage labels (Fig 2) inform the operator of the different power supplies of each bank of sockets. This prevents equipment being plugged into the wrong supply.

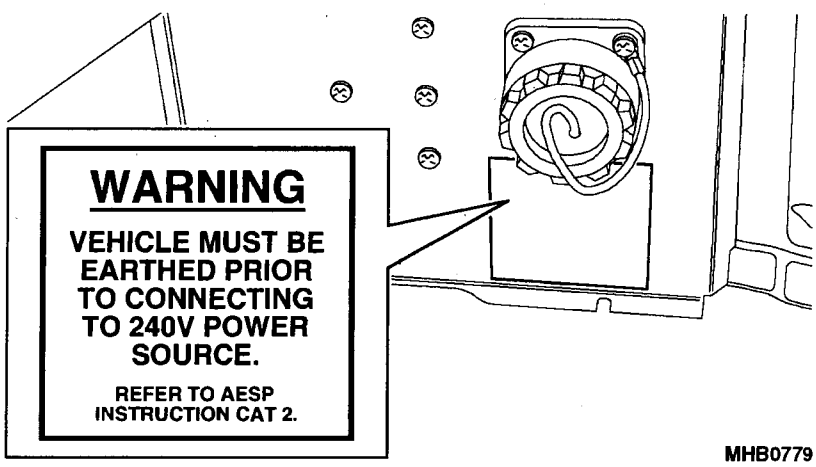

Fig 1 Earth warning label

Roof racks

WARNING

WITH THE EXCEPTION OF THE COMMANDERS IK, ROOF RACKS ARE PROHIBITED FROM BEING FITTED TO TUL/TUM (HS) VEHICLES.

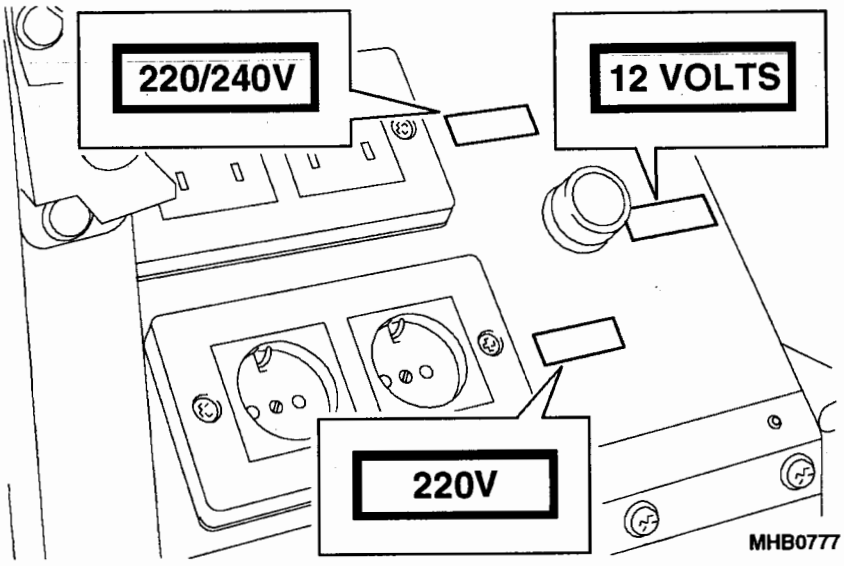

Fig 2 Voltage labels

KEY TO FIG 3

1	Aerial coaxial stowage
2	Side indicator light
3	Spare wheel
4	Aerial outlet
5	Roof rack
6	Radio aerial mounting base
7	Hard top
8	Bumperettes
9	Jerry can holder
10	Door handle
11	Wing mirror
12	Rear number plate light
13	Rear door handle
14	Input/output sock
15	Mounting ladder
16	Windscreen wiper
17	Windscreen washer
18	Escape hatch
19	Front side lights
20	Turn lights
21	Front towing pintle
22	Headlights
23	Rear stop light
24	Reverse light
25	Rear side light
26	12 pin trailer socket
27	Rotating towing hook
28	Turn light
29	Rear fog light
30	Convoy flag holder

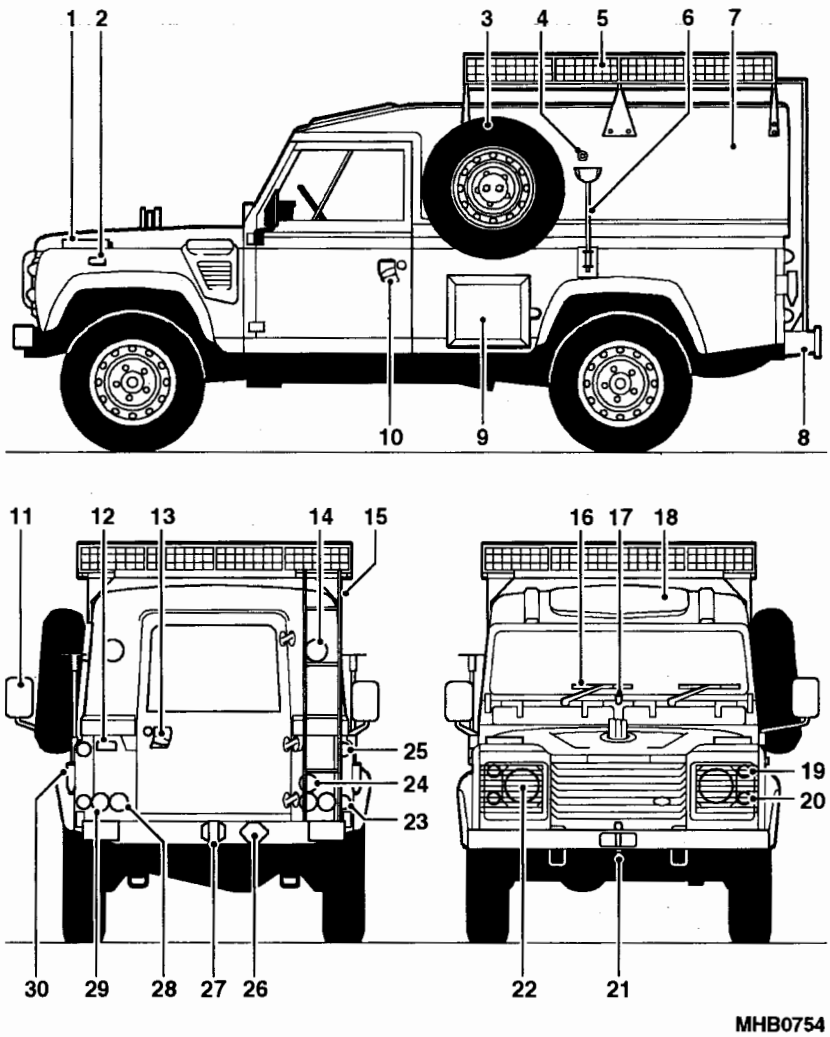

Fig 3 Truck Utility Medium (Commanders IK)

KEY TO FIG 4

1	Retaining strap buckles
2	Interior lights
3	Folding mapboard/bed
4	Cigar lighter
5	Auxiliary sockets
6	Transformer/charger
7	Terminal box
8	Stowage nets
9	Battery box
10	Folding seats
11	Circuit breakers
12	Input socket

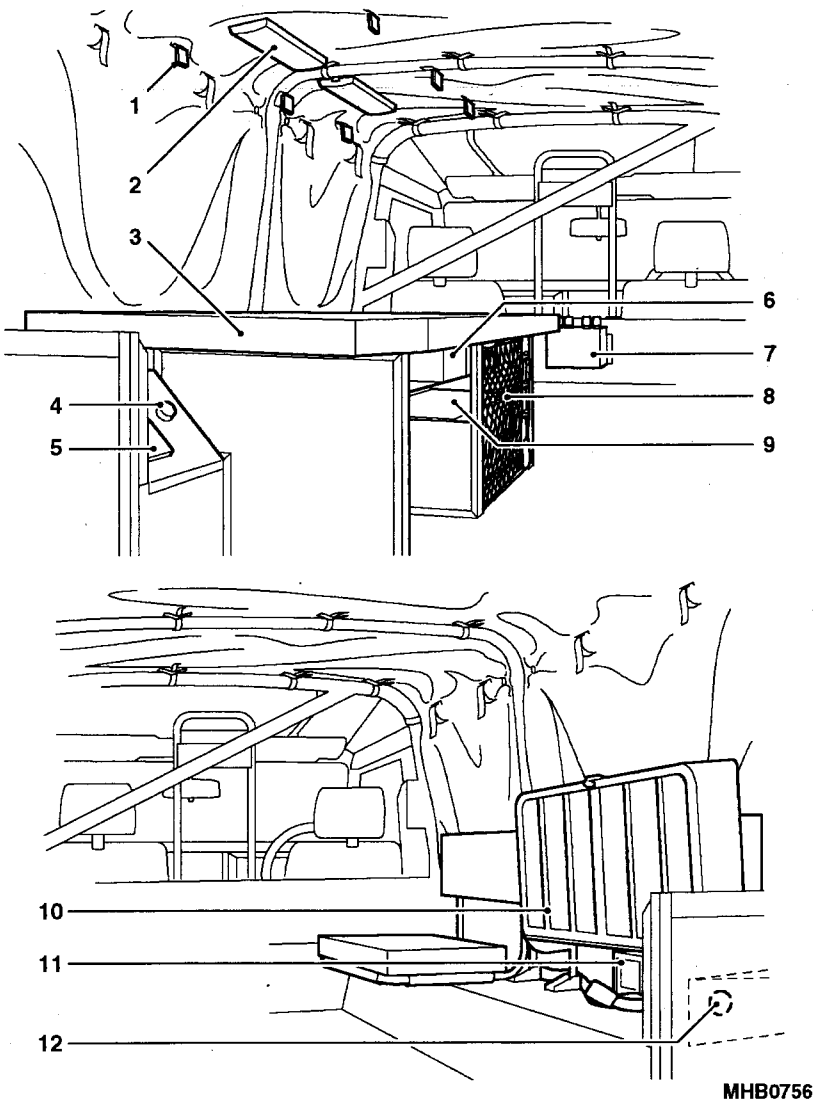

Fig 4 Inside rear of vehicle

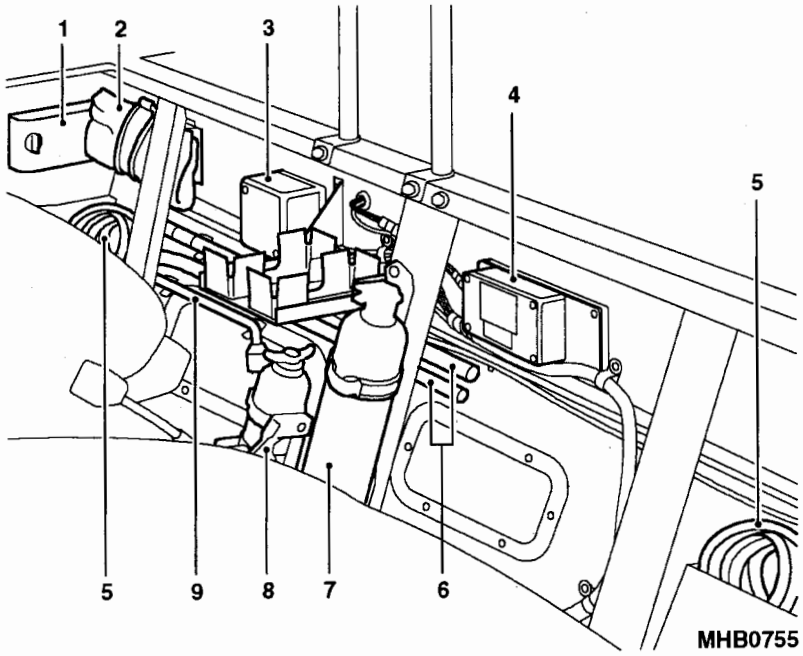

1	Wheel chock	6	Jack handles
2	Tool kit	7	Fire extinguisher
3	Fast fuse	8	Vehicle jack
4	Radio charging circuit ECU	9	Wheel nut wrench
5	Coaxial cable (aerial)		

Fig 5 Rear bulkhead

CHAPTER 1-9

WEAPONS MOUNTED INSTALLATION KIT (RWMIK)

CONTENTS

Para

1 Introduction
4 Crew Protection Mount (WARNING)
5 Folding Interface Mount (FIM)
6 Crew Responsibilities (WARNINGS) (CAUTIONS)
Vehicle/Crew Commander.
Driver.
Gunner.
7 Warning Labels
8 Seat warning label
9 [redacted]
10 Cam net
11 Air locker warning label
12 Vehicle Weight Plate
13 [redacted]
14 Air Locker System
15 [redacted]

Fig		Page
1	Truck Utility Medium RWMIK	2
2	Seat warning label	5
3	[redacted]	6
4	Air locker warning label	7
5	Vehicle Weight Plate	8
6	[redacted]	9

INTRODUCTION

1 This sub-chapter describes all the items applicable to the Truck Utility Medium (TUM) Weapons Mounted Installation Kit vehicles (RWMiK), which are not covered in the previous chapters.

2 External views of the RWMIK are shown in Fig 1.

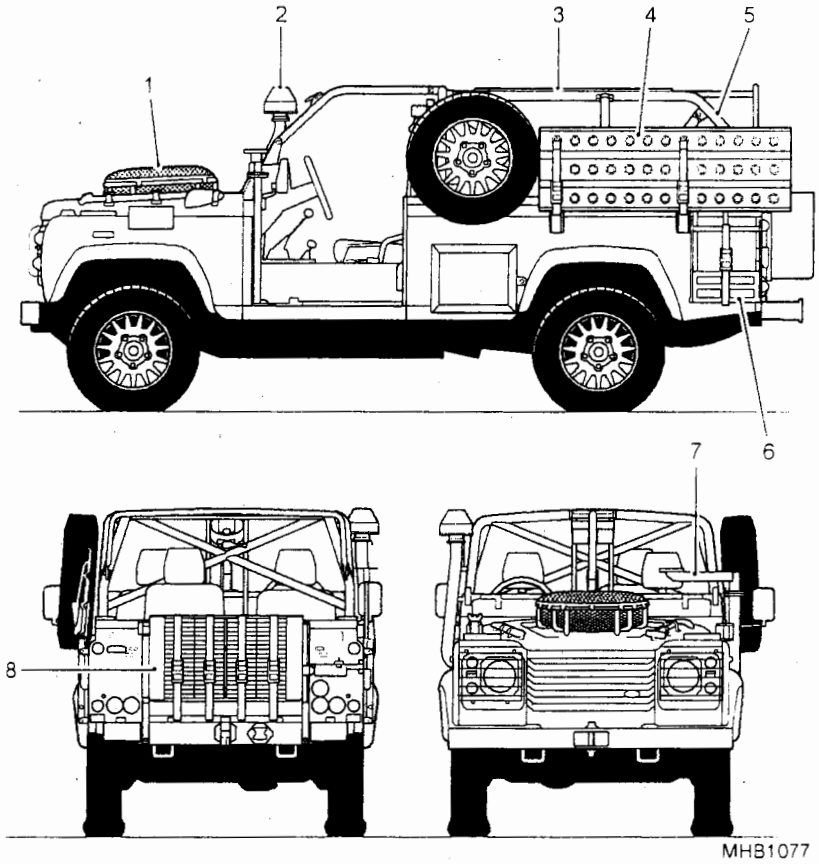

1	Cam net stowage	5	Mounting ring support frame
2	Raised air intake	6	Jerry can stowage
3	Mounting ring	7	CPWM post
4	Sand channels	8	Rear door and pannier

Fig 1 Truck Utility Medium RWMIK

3 The RWMIK variant is based on the TUM (HS) base vehicle utilising the GS or FFR variant. The complete RWMIK variant is fitted with a top hamper and ring mount enabling a 0.5in. Browning machine gun or a 7.62 mm GPMG to be fitted. On the front passengers side a 7.62 mm GPMG is fitted on the crew protection weapons post. Although a weapons platform, the RWMIK is not designed or endorsed for firing on the move. The Standard seating configuration is for a Driver, Commander and Rear Gunner, no other passengers are permitted. The Rear Gunner is to be seated whilst the vehicle is in motion, along with the Commanders seat set in the lower position. All seats have approved passenger restraint belts that must be worn in all circumstances.

CREW PROTECTION MOUNT

WARNING:

THE CPM MUST NOT BE USED WHEN ON THE MOVE.

4 Crew Protection Mount (CPM). The CPM is mounted on the front of the vehicle and allows the vehicle commander to operate a GPMG only while the vehicle is static.

FOLDING INTERFACE MOUNT (FIM)

5 The FIM - Manroy Soft Mount is mounted on top of the roll-bar assembly in the rear of the vehicle. It enables a 6400 mil traverse to engage ground targets from static positions. This mount can be used to operate the following weapons:

5.1 GPMG. The GPMG is mounted on key vehicles to provide an immediate self defence capability.

5.2 0.50 HMG. RWMIK will allow for the operation of the enhanced HMG equipped with the Manroy Soft mount, Quick Change Barrel (QCB), RC 25c reflex sight and Maxikite night sight.

CREW RESPONSIBILITIES

6 Due to the stowage and safety constraints associated with RWMIK, the vehicle Crew is strictly limited to three (3) personnel and will consist of the following:

6.1 Vehicle/Crew Commander. The vehicle/crew commander has overall responsibility for the RWMIK vehicle and its weapons systems. The commander navigates, performs surveillance, assists in target acquisition, passes and receives information on the radio, assesses and anticipates the battle and passes orders to the remainder of the crew. In addition, once thee RWMIK vehicle occupies a fire position, the vehicle commander is responsible for protecting the vehicle by operating the front mounted GPMG.

WARNING

THE RWMIK COMMANDER MUST BE TRAINED IN ACCORDANCE WITH THE RWMIK CRITICAL SAFETY ASPECTS AS DIRECTED IN RWMIK - REVISED CONCEPTS OF USE, REF 088/24/00 DATED 25 AUG 05.

6.2 Driver. The driver is responsible for operating the vehicle and for manoeuvring it safely in accordance with direction received from the vehicles commander.

CAUTION

The Driver must be qualified in accordance with the DRLC GS driver pack and the RWMIK Specific instructions taken from Ref 1 of Annex B to RWMIK - Revised Concepts of Use, Ref 088/24/00 dated 25 Aug 05.

6.3 Gunner. The Gunner is responsible for operating the rear mounted weapon. The gunner is also responsible for surveillance, target acquisition, operating and maintaining the weapon and engaging targets.

CAUTION

The Gunner must be qualified on the weapons he is using and be trained in accordance with the RWMIK critical safety aspects as directed in Annexes A, B and C to RWMIK - Revised Concepts of Use, Ref 088/24/00 dated 25 Aug 05.

WARNING

THE RWMIK MUST NOT BE USED TO CARRY ANY PERSONNEL OTHER THAN THE THREE (3) SHOWN ABOVE.

WARNING LABELS

7 There is on the dash of the vehicle a label that is over and above those labels that are mentioned in the previous chapters.

Seat warning label

8 The seat warning label (Fig 2) advises individuals not to have the seat in the raised position when the vehicle is moving.

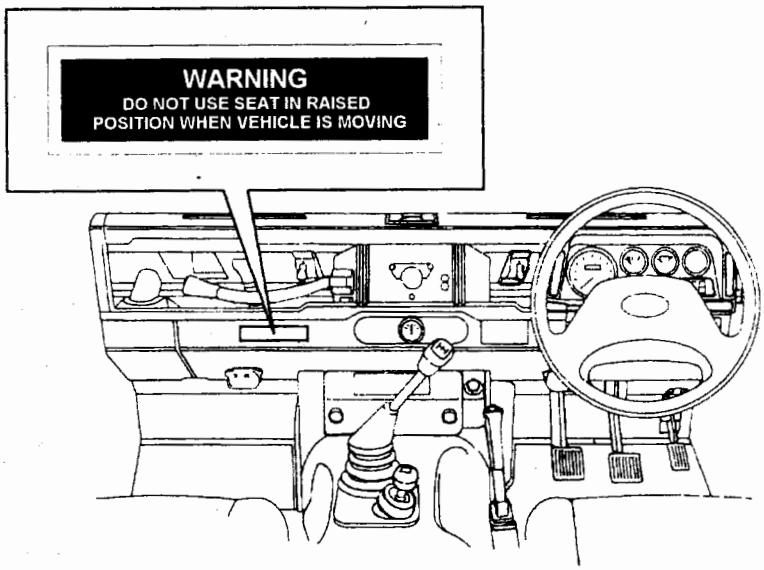

RIC201.7

Fig 2 Seat warning label

[redacted]

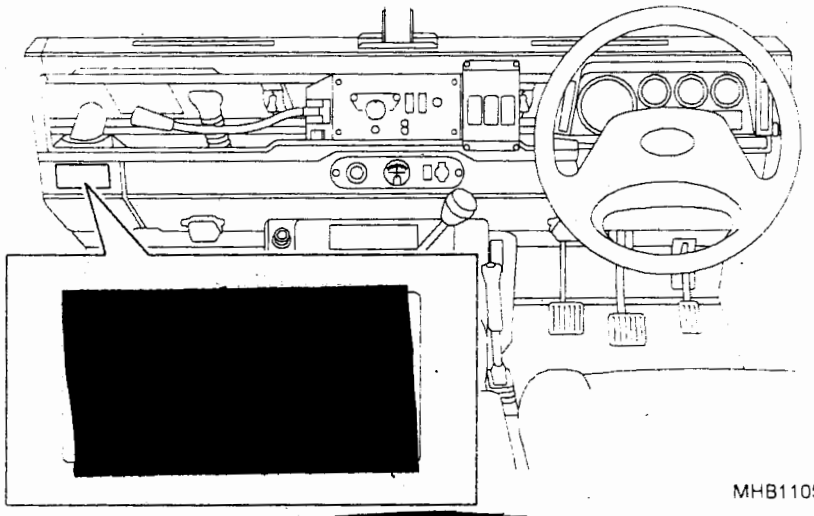

[redacted]

Cam net

10 There is, stencilled on the bonnet, the warning "FOR CAM NET ONLY", this must be adhered to.

Air locker warning label

11 The air locker warning Label (Fig 4) advises individuals to refer to the users guide before operating the air locker system. Refer to para 14 and Chapter 13-9 for further information.

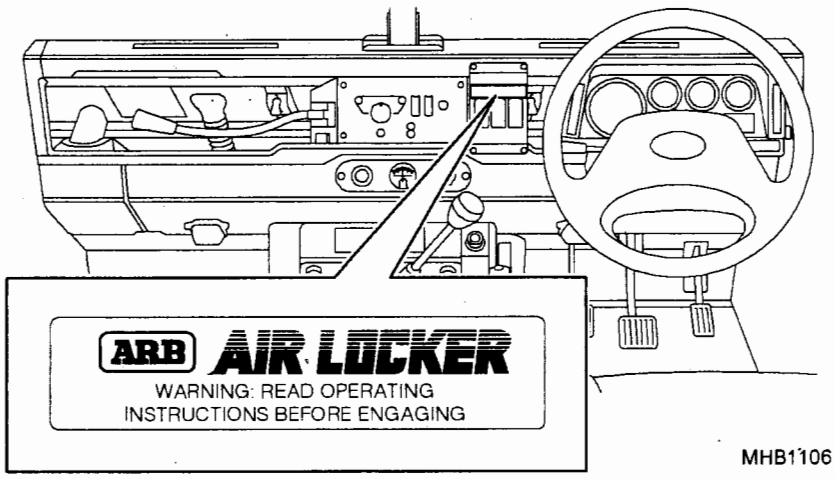

Fig 4 Air locker warning label

VEHICLE WEIGHT PLATE

12 The vehicle weight plate is located on the side of the drivers heel box (Fig 5).

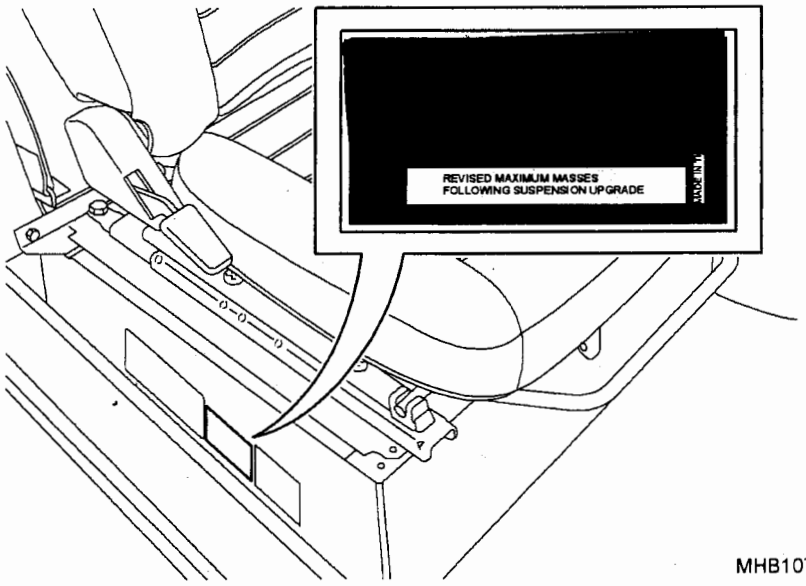

Fig 5 Vehicle weight plate

[redacted]

[redacted]

CAUTION

[redacted]

1

[redacted]

AIR LOCKER SYSTEM

14 The ARB Air Locker System is used to lock the front or rear differentials providing improved traction. The air operated locking differentials are powered by an electric air compressor controlled by switches mounted on the vehicle dash. The vehicles tyres can be inflated using the ARB Air Locker Systems electric air compressor and tyre inflation hose.

[redacted]

CHAPTER 1-10

TROPICAL FIELD AMBULANCE

CONTENTS

Para

1 Introduction
2 General
3 Air conditioning

INTRODUCTION

1 This sub-chapter describes all the items applicable to Tropical Field Ambulance which are not covered in the previous chapters.

General

2 All information appertaining to the Tropical Field Ambulance vehicles can be found in sub-chapter 1-3

AIR CONDITIONING

3 The air conditioning system provides cold air to both the driver and ambulance compartments via adjustable vents located in the fresh air/recirculation unit above the attendants seat and the evaporator unit in the drivers compartment.

4 The air conditioning is provided by a compressor, driven off the engine and a cooler/evaporator unit located in the drivers compartment. On/Off and fan switch controls for the distribution of the air conditioning are mounted on the distribution/control box in the ambulance compartment.

CHAPTER 1-11

WINTERISED/WATERPROOFED FIELD AMBULANCE

CONTENTS

Para

1 Introduction
2 General
3 Wading

Fig Page

1 Wading label 2

INTRODUCTION

1 This sub-chapter describes all the items applicable to Winterised/Waterproofed Field Ambulance, which are not covered in the previous chapters.

General

2 All information appertaining to the Winterised/Waterproofed Field Ambulance vehicles can be found in sub-chapter 1-4

WADING

3 The label (Fig 1) is located on the dash in front of the steering wheel and informs the driver of the maximum depth the vehicle can safely ford at.

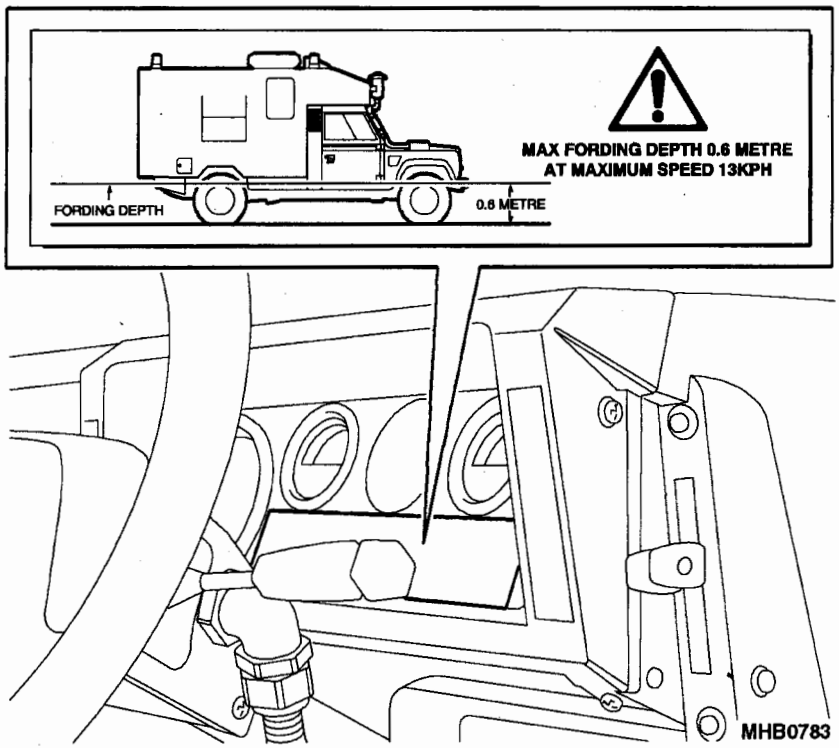

Fig 1 Wading label

CHAPTER 1-12

WATERISED
WEAPONS MOUNTED INSTALLATION KIT (WMIK)

CONTENTS

Para

1 Introduction

Fig | Page

1 Waterised Truck Utility Medium (WMIK) 2

INTRODUCTION

1 This sub-chapter describes all the items applicable to the Waterised Truck Utility Medium (TUM) Weapons Mounted Installation Kit vehicles (WMIK), which are not covered in the previous chapters.

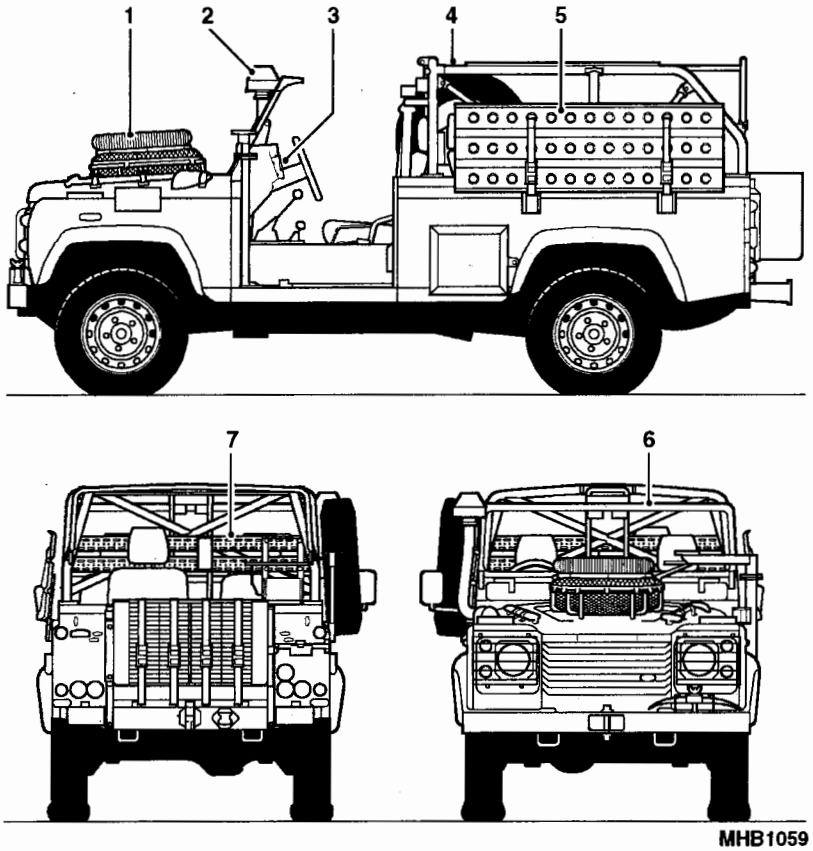

1	Raised air intake extension tube	5	Sand Channels
2	Raised air intake	6	Front windscreen
3	GPS Mounting	7	Radio rack and mounting
4	GPMG/HMG Barrel clamps		

Fig 2 Truck Utility Medium (WMIK)

CHAPTER 2

CONTROLS AND INSTRUMENTS

CONTENTS

Para

1 Introduction
2 General

INTRODUCTION

1 This chapter describes the Controls and Instruments applicable to the Truck Utility Light (TUL) HS, Truck Utility Medium (TUM) HS and (TUM) Ambulance HS variants listed in the following sub-chapters:

1.1 Chapter 2-1 Basic vehicle

1.2 Chapter 2-2 Fitted For Radio (FFR)

1.3 Chapter 2-3 Field Ambulance

1.4 Chapter 2-4 Winterised/Waterproofed

1.5 Chapter 2-5 Winterised

1.6 Chapter 2-6 Air drop

1.7 Chapter 2-7 Helicopter Support Platform

1.8 Chapter 2-8 Commanders IK

1.9 Chapter 2-9 Weapons Mounted Installation Kit

1.10 Chapter 2-10 Tropical Field Ambulance

1.11 Chapter 2-11 Winterised/Waterproofed Field Ambulance

1.12 Chapter 2-12 Waterised Weapons Mounted Installation Kit

General

2 The information given in this Chapter is applicable to both left and right hand vehicles.

CHAPTER 2-1

BASIC VEHICLE

CONTENTS

Para

1 Introduction
2 The vehicle side doors
3 To open and close the doors from outside
4 To open and close the drivers door from inside
5 To open and close the passengers door from inside
6 Tailgate
7 Vehicle fascia
8 Driver/Passenger seats
9 Fore and aft adjustment
10 Back angle rest adjustment
11 Head restraints
12 Safety harness
13 Operating the belt
14 Testing the safety harness (WARNING)
15 Care of the belts
16 Harness cleaning
17 Instrument panel
18 Coolant temperature indicator
19 Fuel level indicator
20 Speedometer
Speedometer trip setting
21 Warning lights panel
Oil pressure warning light
Brake circuit warning light
Turn light arrows
Main beam warning light
Differential lock warning light
Trailer warning light
Side lights warning light
Rear fog guard lights warning light
Diesel cold start warning light
22 Hazard warning switch
23 Operating the switch

(continued)

CONTENTS (continued)

Para

24 Steering wheel console
25 The windscreen wash/wipe switch
26 Rear fog guard light switch
27 Headlight dipper, turn lights, horn and headlight flasher
Operation of the switch
30 Steering lock and starter switch (WARNING)
31 Steering wheel
32 Dash ventilators
33 Six Way Main lighting switch
34 Seven Way Main lighting switch
35 Inspection sockets
36 Headlamp levelling
37 Map reading light
38 Fresh air/heating controls
39 The heater controls
Air distribution control lever
Temperature control lever
Blower motor lever
40 Pedals
41 Foot brake pedal
42 Bonnet release handle
43 Inter vehicle starting socket
44 Operation of the socket
45 Battery isolator switch
46 Fire extinguisher bracket
47 Operation of the extinguisher
48 Transmission handbrake
49 Transfer gear/differential lock lever (CAUTIONS)
50 Fully rearwards right
51 Fully rearwards left
52 Centre left
53 Centre right
54 Fully forward right
55 Fully forward left
56 Main gearchange lever
57 Fuse boxes (WARNING)
58 Main fuse box
59 Under bonnet fuse box
61 Stowage compartments
67 Bench seats

(continued)

CONTENTS (continued)

Para

70 Bench seat belt stowage
71 Windows
72 Vehicle tool kit
74 Infrared lighting switch

Fig		Page
1	External door locks	4
2	Internal door locks	5
3	Tailgate locking mechanism	6
4	Seat adjustment	7
5	Seat belt operation	8
6	Coolant temperature indicator	10
7	Fuel level indicator	11
8	Speedometer and trip setting	12
9	Warning lights panel	14
10	Hazard warning switch	16
11	Windscreen wash/wipe switch	17
12	Rear fog guard lights switch	18
13	Headlight dipper, turn lights, horn and headlight flasher	19
14	Steering lock and starter switch	20
15	Dash ventilators	21
16	Six Way Main lighting switch	22
17	Seven Way Main lighting switch	23
18	Inspection sockets	24
19	Headlamp levelling switch	25
20	Map reading light	25
21	Fresh air/heating controls	26
22	Pedal layout	28
23	Bonnet release lever	29
24	Bonnet safety catch	29
25	Inter vehicle starting socket	30
26	Battery isolator switch	32
27	Fire extinguisher bracket	33
28	Transmission handbrake lever	34
29	Transfer gear/differential lock lever	36
30	Main gear change lever	36
31	Main fuse box location	37
32	Under bonnet fuse box location	38
33	Removing the seat base cover	39
34	Bench seats	40
35	Bench seat belt stowage	41

36 Operating the windows 42
37 Vehicle tool kit 43
38 Infrared lighting controls 45/46

INTRODUCTION

1 This sub-chapter describes the Controls and Instruments applicable to the Truck Utility Light (TUL) HS and Truck Utility Medium (TUM) HS vehicles.

THE VEHICLE SIDE DOORS

2 There are two side doors fitted to the vehicle. The following operations apply to the above mentioned doors and are similar in many of the operations.

To open and close the doors from the outside

3 To unlock the doors

3.1 Insert the key into the lock (Fig 1 (1)) and turn it towards the rear of the vehicle (a quarter turn), return the key to the vertical position and remove.

3.2 To open the door, lift the handle (2).

3.3 To lock the door, turn the key towards the front of the vehicle (a quarter turn), return key to the vertical position and remove.

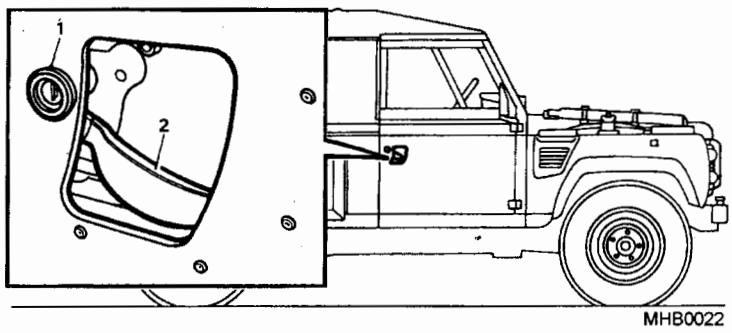

Fig 1 External door locks

To open and close the drivers door from the inside

NOTE

This affects only the driver's door.

4 To unlock the door:

4.1 Move the knob (Fig 2 (2)) on the lock case downwards.

4.2 Open the door using the inside handle (1).

4.3 To lock the door, close the door and move the knob on the lock case upwards.

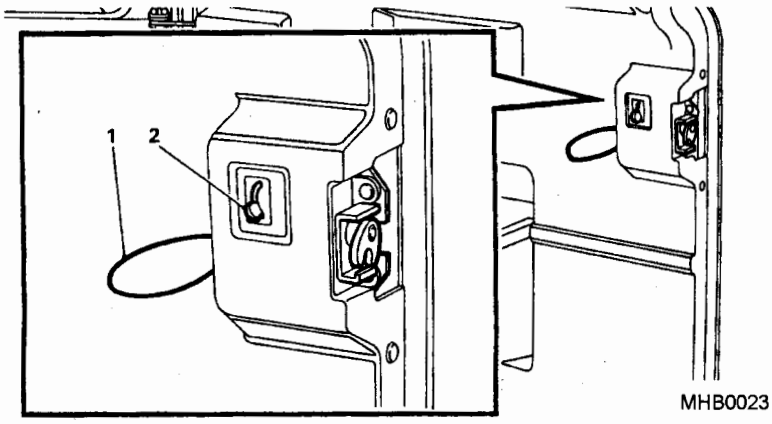

Fig 2 Internal door locks

To open and close the passengers door from the inside

NOTE

This affects only the passenger's doors.

5 To unlock the door:

5.1 Move the knob (2) on the lock case downwards.

5.2 Open door using inside handle (1).

5.3 To lock the door move knob on lock case upwards before or after closing door.

TAILGATE

6 The tailgate is either side or bottom hinged. The tailgate is secured by two latches in both cases. Restraining straps prevent excess travel for bottom hinged tailgates and a retaining door holder limits the travel for side hinged conversions. (Refer to Fig 3)

To release the tailgate

6.1 Move the catches in an upward direction until they are able to fall into the horizontal position (Fig 3).

6.2 For bottom hinged tailgates, pull the tailgate outwards until the retaining straps prevent any further travel. To close the tailgate, lift the tailgate and push it fully against the latching and secure.

6.3 For side hinged conversions, rotate outwards until the retaining door holder prevents further travel. To close rotate tailgate inwards push against the latching and secure.

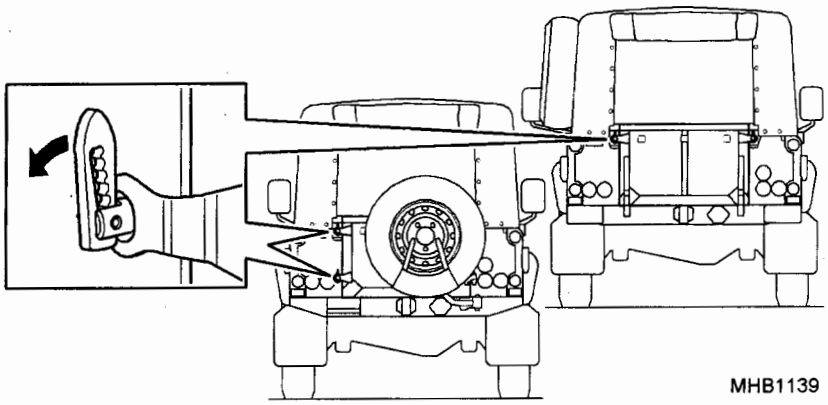

Fig 3 Tailgate locking mechanism

VEHICLE FASCIA

7 The vehicle fascia displays the instruments and controls required by the operator when driving the vehicles.

DRIVER/PASSENGER SEATS

8 The front seats (Fig 4) have an adjustable setting for ease of driving and comfort.

Adjusting the seats

9 Fore and aft adjustment. Lift the bar at the front of the seat and slide the seat to the required position. Release the bar and ensure that the seat guide catches have located the seat.

10 Back angle rest adjustment. Ease the body from backrest and lift locking handle. Apply body pressure to move the back rest to the required position, then press the handle down to lock. The backrest return is spring assisted.

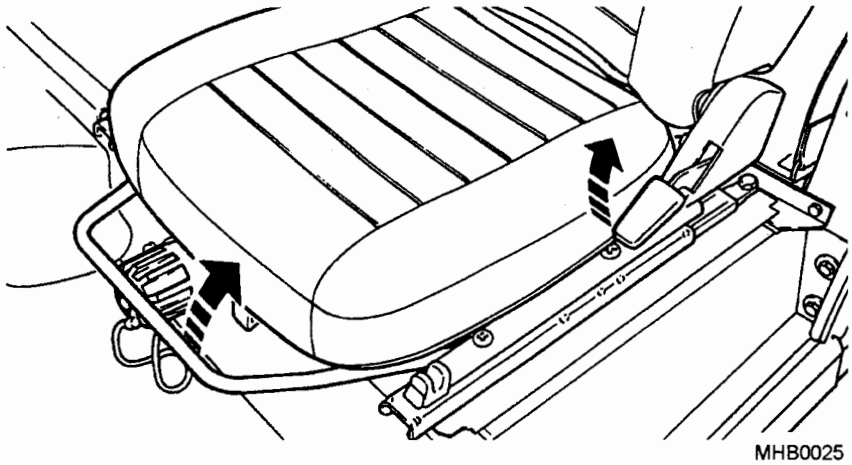

MHB0025

Fig 4 Seat adjustment

11 Head restraints. Head restraints are fitted to the adjustable backrests of both the driver and front passenger seats. Each head restraint should be properly adjusted to provide maximum effectiveness in the event of a collision.

SAFETY HARNESS

12 The safety harness must be fitted to the anchorage points provided. Always use the safety harness provided, even for the shortest journeys. Alterations and additions must not be made to the harness fitted to the vehicles.

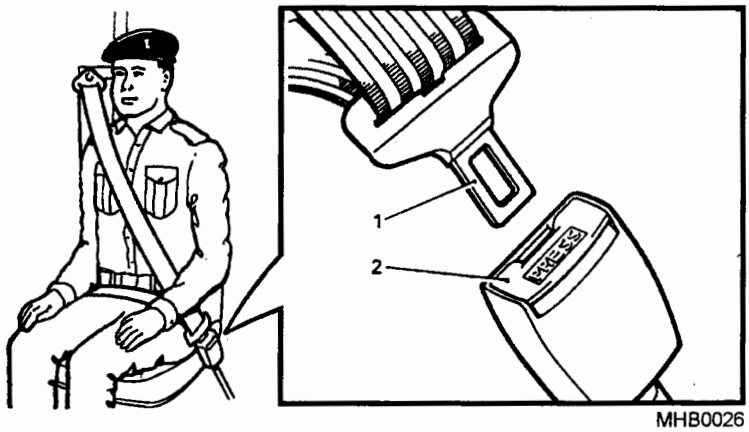

Fig 5 Seat belt operation

Operating the belt

13 When operating the belt always ensure that the following points are observed:

13.1 Ensure that the belt is lying flat and is not twisted either on the wearer's body or between the wearer and the anchorage point.

13.2 Never attempt to use the seat belt for more than one person.

13.3 To fasten, draw the tongue of the belt (Fig 5 (1)) over the shoulder and across the chest, then push it into the engagement/release slot. A positive click indicates that the belt is locked.

13.4 To release, press the release button (2) which will disengage the buckle; this allows the belt to retract. Position the moveable clip as high as possible so that the tongue is accessible when the belt is next required.

Testing the safety harness

WARNING

THIS TEST MUST BE CARRIED OUT UNDER SAFE ROAD CONDITIONS, I.E. LEVEL DRY ROAD WITH NO FOLLOWING OR ONCOMING TRAFFIC.

14 With the belts in use, drive the vehicle at 8kph (5mph) and brake sharply. The automatic locking device should operate and lock the belt. It is essential that the driver and passenger are sitting in a normal relaxed position. The retarding effect of the braking must not be anticipated.

Care of the belts

15 The safety harnesses are possible life-saving equipment, and should be regarded with the same importance as steering and brake systems. Frequent inspection is advised to ensure continued effectiveness in the event of an accident. Inspect the harness and check as follows:

15.1 Inspect the belt webbing periodically for signs of abrasion and wear, paying particular attention to the fixing points.

15.2 If worn correctly and stowed on the stowage points provided, deterioration will be kept to a minimum and protection to a maximum.

15.3 Seat belt assemblies must be replaced if the vehicle has been involved in an accident or if upon inspection, there is evidence of cutting or fraying of webbing, incorrect buckle or tongue locking function, and/or any damage to the buckle cabling. If any fault is found report it immediately.

Harness cleaning

16 Do not attempt, when cleaning harness, to bleach the belt webbing or re-dye it. If the belts become soiled, sponge with warm water using a non-detergent soap and allow them to dry naturally. Do not use caustic soap, chemical cleaners or detergents for cleaning; do not dry with artificial heat or by direct exposure to the sun.

INSTRUMENT PANEL

17 The instrument panel is situated in front of the steering wheel console and consists of the following instruments:

Coolant temperature indicator

18 The coolant temperature gauge (Fig 6) indicates the running temperature of the engine. Under normal running conditions the temperature indicator needle should register in the black band. If the needle moves to the red band during normal running, the vehicle should be stopped and the cause investigated. The design of the indicator ensures that the needle does not fluctuate, but there is a time lag of a few seconds before registering after the engine has been started, or electrical services are switched on.

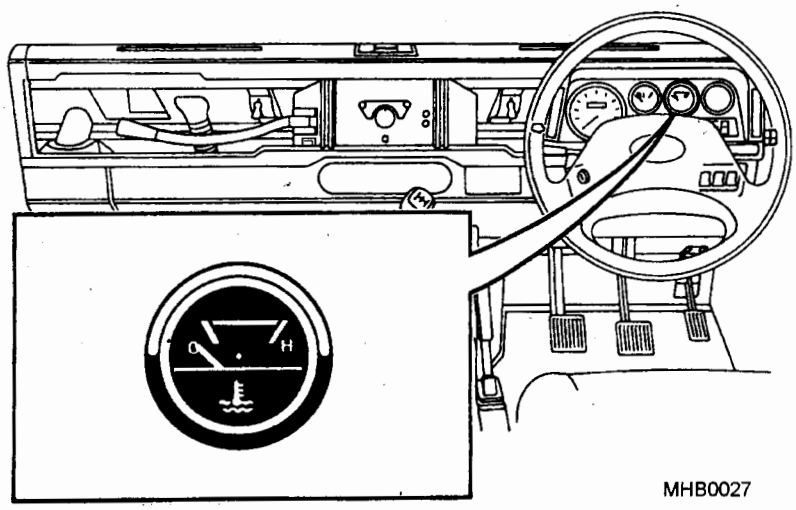

Fig 6 Coolant temperature indicator

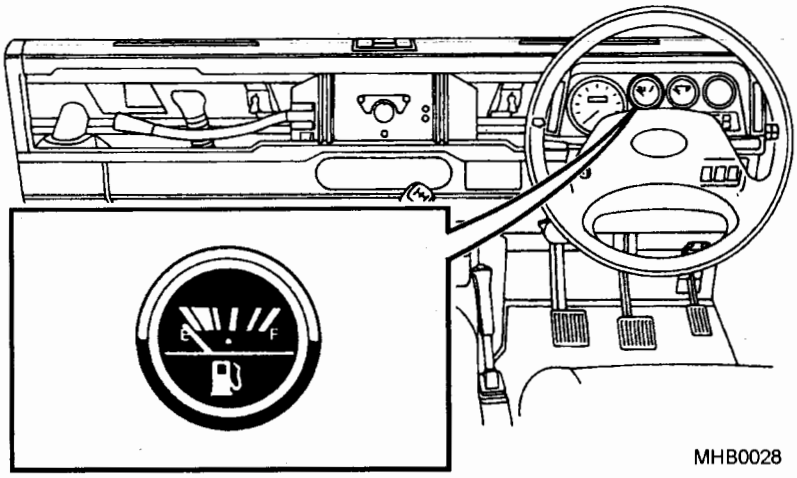

Fig 7 Fuel level indicator

Fuel level indicator

19 The fuel level indicator (Fig 7) shows the approximate contents of the tank. The design of the indicator ensures that the needle does not fluctuate, but there is a time lag of a few seconds before registering after the engine has been started, or after the electrical services have been switched on.

Speedometer

20 The speedometer (Fig 8) indicates the speed of the vehicle in kilometres per hour with a miles per hour subscale. The speedometer incorporates a total distance indicator and a trip distance indicator with a trip reset button (1).

20.1 Speedometer trip setting. The speedometer trip setting allows the indicator to be reset to zero by pushing the small black knob on the front of the speedometer.

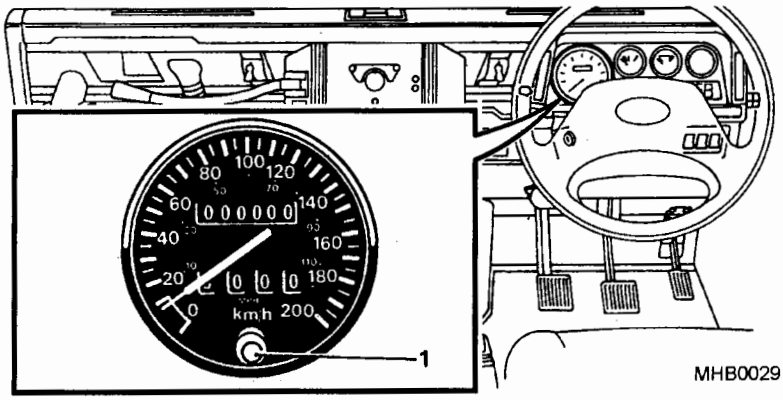

Fig 8 Speedometer and trip setting

Warning lights panel

21 The warning lights panel (Fig 9) incorporates all the warning symbols.

21.1 Oil Pressure warning light. The red oil pressure warning light (2) will illuminate when the ignition is switched on, also when there is abnormality in the oil pressure.

21.2 Ignition warning light. The red ignition warning light (3) will illuminate when the ignition is switched on.

NOTE

The ignition and oil warning lights should be checked when starting the vehicle from cold as they should light up immediately the ignition is switched on and extinguish when the engine is running. The warning lights may flicker when the engine is running at idling speed but provided they fade out as the engine speed increases, the charging rate and oil pressure are satisfactory. If the oil pressure warning light comes on during normal running, the vehicle should be stopped immediately and the cause investigated. The ignition warning light is connected in series with the alternator field circuit. Bulb failure would prevent the alternator charging properly; therefore the bulb should be checked before suspecting an alternator fault. A failed bulb should be changed with the minimum of delay otherwise the vehicle battery will become discharged.

21.3 Brake circuit check warning light. The red brake circuit check warning light (4) will illuminate if there is a fluid leakage, when the ignition is on or the engine is running, from either the front or rear braking system. If leakage occurs the light will illuminate when the brakes are applied. The brake circuit warning light will operate momentarily when the starter is actuated. This will confirm that the warning circuit is functioning correctly. If the light comes on during normal running or braking, the vehicle should be stopped immediately and the cause investigated.

21.4 Turn light arrows. The green turn light arrows (5) flash in conjunction with the turn lights, when operated by the stalk on the steering column. If the turn light do not operate as described, there may be a bulb failure in the warning light panel or in one of the turn lights.

21.5 Main beam warning light. The blue main beam warning light (6) illuminates when the headlight main beams are operating. The purpose is to remind the operator to dip the headlights when entering brightly lit areas, or when approaching other traffic. The light will also illuminate when the headlight flasher switch is operated.

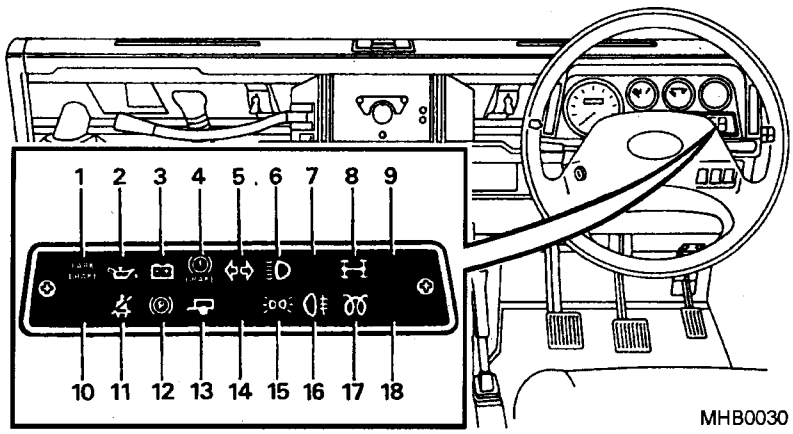

1	Park Brake (not used)	10	Spare
2	Oil pressure	11	Seat belt (not used)
3	Ignition	12	Park brake (not used)
4	Brake circuit	13	Trailer
5	Turn lights	14	Spare
6	Main beam	15	Side lights
7	Low fuel (not used)	16	Rear fog
8	Differential lock	17	Cold start
9	Heated rear screen (not used)	18	Battery charging (24V)(not used)

Fig 9 Warning lights panel

21.6 Differential lock warning light. The amber differential lock warning light (8) will illuminate when the gearbox differential lock control knob is engaged. The differential lock should be engaged if traction to one or more wheels is likely to be lost. A return to the disengaged position should be made as soon as conditions permit.

21.7 Trailer warning light. The green trailer warning light (13) illuminates when a trailer is connected to the vehicle via the twelve pin socket. It will flash in conjunction with the vehicle's turn lights, thus ensuring that the trailer turn lights are functioning correctly. In the event of a turn light bulb failure on the trailer, the warning light will flash once only and then remain extinguished. Where a trailer is not used or connected, the trailer warning light momentarily flashes every time the turn light switch is operated.

21.8 Side lights warning light. The green side lights warning light (15) will illuminate when the side lights are switched on.

21.9 Rear fog guard lights warning light. The amber rear fog guard warning light (16) will illuminate when the rear fog guard switch is switched on.

21.10 Diesel-cold start warning light. The amber diesel-cold start warning light (17) will illuminate when the engine starter key is turned to the heater plugs "on" position and will go off as soon as the correct starting temperature has been reached.

HAZARD WARNING SWITCH

22 The hazard warning switch (Fig 10 (1)) is located below and to the right of the instrument panel.

Operating the switch

23 The switch has a two way rocker action which operates as follows:

23.1 Press the upper end of the switch in, the hazard lights are off.

23.2 Press the lower end of the switch in, the hazard warning lights are on.

23.3 With the switch on, all four turn lights operate simultaneously. The red warning light (with the triangular symbol) in the switch will flash in conjunction with the exterior turn lights, also the trailer light will flash. The trailer light will also flash even when there is no trailer attached.

23.4 Use the hazard warning system to warn following or oncoming traffic of any hazard, that is, breakdown on fast roads, or an accident to the vehicle or other vehicles.

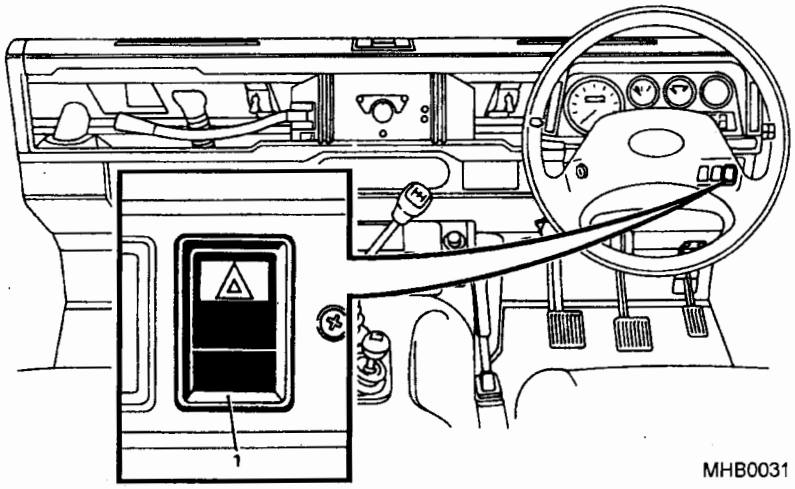

Fig 10 Hazard warning switch

STEERING WHEEL CONSOLE

24 The steering wheel console comprises the following switches and controls:

The windscreen wash/wipe switch

25 This is located on the right hand side of the console and is only operative when the ignition is switched on. The switch has five positions:

25.1 With switch in the upper position; (Fig 11 (1)) fast speed wiper.

25.2 With switch in the second position; (2) slow speed wiper.

25.3 With switch in the third position; (3) wipers off.

25.4 With switch in the lowest position; (4) "flick-wipe" position where the wipers will operate at slow speed until the switch is released.

25.5 When the switch (3) is pressed in, to the screen wash position, water is ejected onto the screen. To stop this water, release the switch. This operation can be done with the wiper switch on or off.

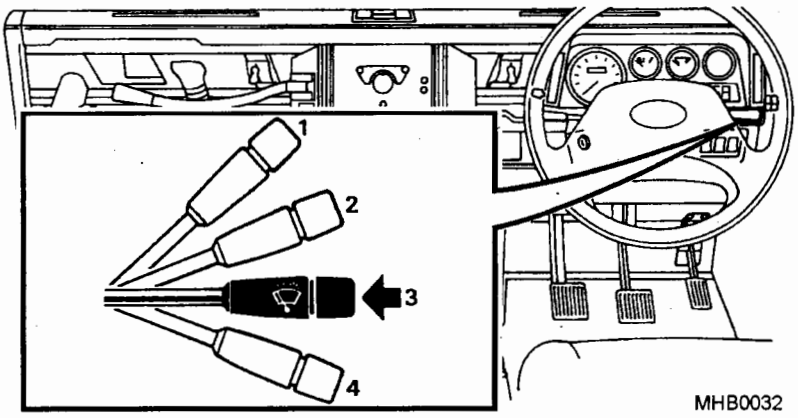

Fig 11 Windscreen wash/wipe switch

Rear fog guard lights switch

26 The rear fog guard lights (Fig 12) are operated by a two-position, on/off rocker switch (1). It is located on the right-hand side of the instrument panel, next to the hazard warning light switch.

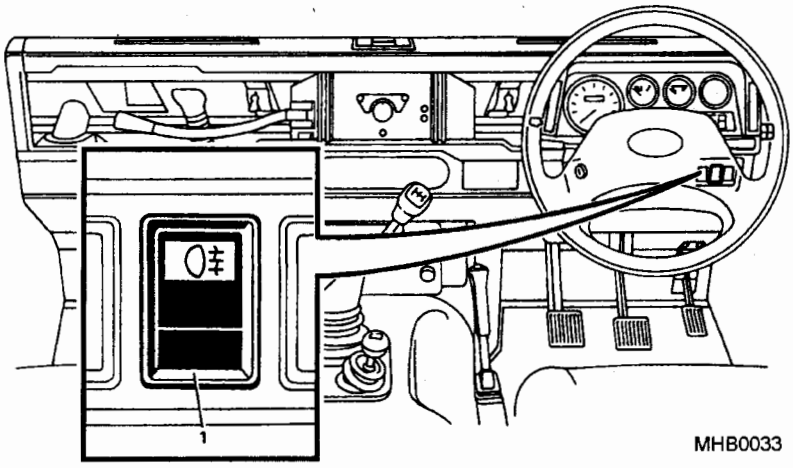

Fig 12 Rear fog guard lights switch

27 The switch pulled towards the driver (4) is the headlight flash. The headlights can be flashed at any time, irrespective of other switch positions except when in blackout mode.

Headlight dipper, turn lights, horn and headlight flasher switch

28 The headlight dipper, turn lights, horn and headlight flasher switch (Fig 13) is located on the left hand side of the console.

29 The switch has six positions:

29.1 The switch in the central position (3) is dipped headlights.

29.2 The switch pushed away from the driver (2) is main beam.

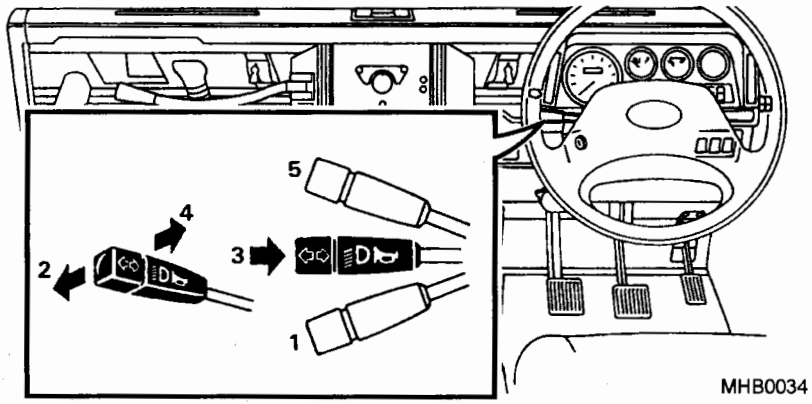

Fig 13 Headlight dipper, turn lights, horn and headlight flasher

29.3 Press the switch inwards (3) to operate the horn.

29.4 The switch in the upper position (5) operates the right-hand turn light.

29.5 The switch in the lower position (1) operates the left-hand turn switch.

Steering lock and starter switch

WARNING

IF FOR ANY REASON THE ENGINE IS SWITCHED OFF WHILE THE VEHICLE IS IN MOTION. DO NOT UNDER ANY CIRCUMSTANCES RETURN THE KEY TO THE "STEERING LOCKED" POSITION "O" UNTIL THE VEHICLE IS STATIONARY. TO PREVENT THE STEERING COLUMN LOCK ENGAGING IT IS MOST IMPORTANT THAT BEFORE THE VEHICLE IS MOVED IN ANYWAY, FOR EXAMPLE TOWING, THE KEY MUST BE INSERTED IN THE LOCK AND TURNED TO POSITION "I". IF, DUE TO AN ACCIDENT OR ELECTRICAL FAULT IT IS NOT CONSIDERED SAFE TO TURN THE KEY, THE BATTERIES MUST FIRST BE DISCONNECTED.

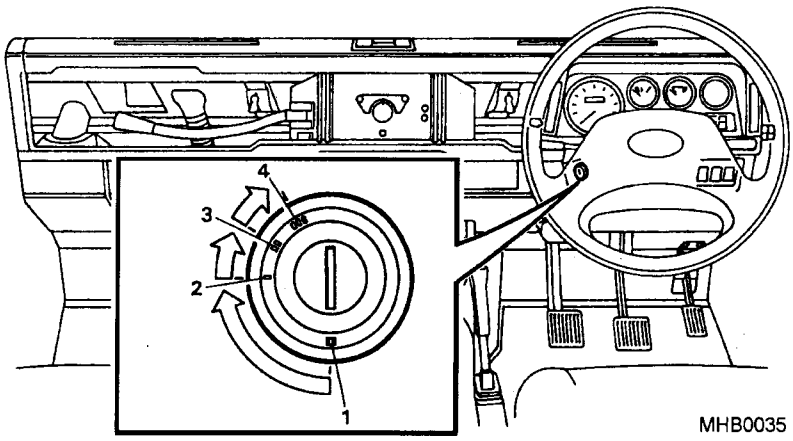

Fig 14 Steering lock and starter switch

30 The steering lock and starter switch are an integral part of the combined four position key operated switch, which operates the ignition switch. It is located to the left-hand side of the console and below the headlight dipper switch and operates as follows:

30.1 The key in position "O" (Fig 14 (1)) all electrical circuits (except Interior, Headlight flash and Hazard lights switched off, steering lock engaged.

30.2 The key in position "I" (2) the steering lock is disengaged. If the steering lock has been engaged, slight movement of the steering wheel will assist in its disengagement. To engage the steering lock, turn the key fully back, "O" and withdraw it from the lock

30.3 Continue to turn the key to position "II" (3) the heater plugs are on and the amber warning light will illuminate.

30.4 Turn the key further against spring pressure to position "III" (4) to operate the starter motor. When the engine has started release the key and it will automatically return to the third position, "II", the key in this position is the "run" mode.

Steering wheel

31 The steering wheel is connected to the front wheels by a series of columns and rods via a steering box. To change from hard right to hard left requires the steering wheel to be turned four times.

DASH VENTILATORS

32 The two dash ventilators are mounted in the scuttle and are open to the atmosphere. The dash ventilators may be opened separately by pushing the lever (Fig 15 (1)) downwards until the desired position is obtained. Use of the ventilators will be found advantageous when traversing dusty roads, as dust sucked into the vehicle from the rear is greatly reduced.

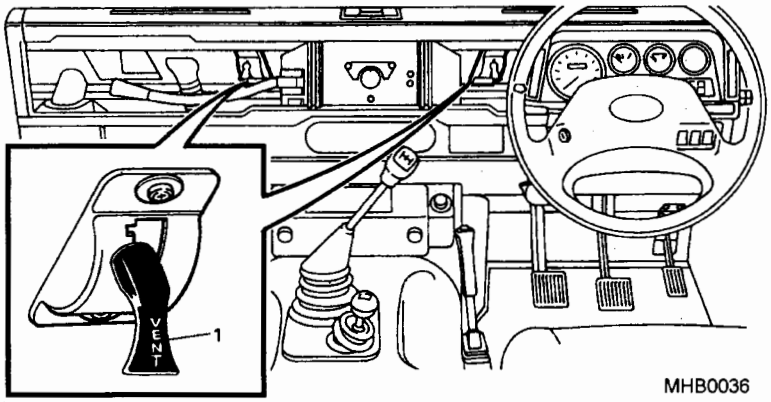

Fig 15 Dash ventilators

SIX WAY MAIN LIGHTING SWITCH

33 The six way main lighting switch (Fig 16 (1)) is situated in the centre of the fascia and has six positions. Fitted over the top of the switch is an indicator panel plate (2) which shows the individual positions as follows:

33.1	OFF	-	All lights are off
33.2	CONV	-	Convoy light only
33.3	SCONV	-	Convoy and side lights
33.4	T	-	Tail and rear number plate lights
33.5	ST	-	Side, tail and rear number plate lights
33.6	HST	-	Head, side, tail and rear number plate lights

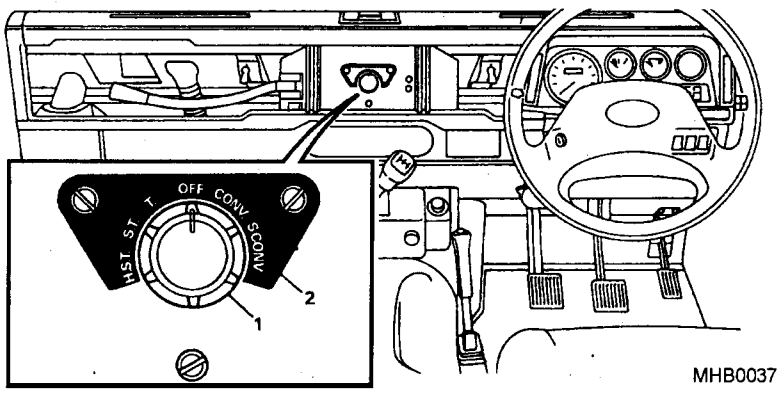

Fig 16 Six way main lighting switch

SEVEN WAY MAIN LIGHTING SWITCH

34 The Seven way main lighting switch is situated in the centre of the fascia and has seven positions. For normal working operate the switch in positions "TAG", "1" and "2". To operate the switch in the blackout positions "0", "S1", "S2" and "S3", push the bar (Fig 17 (1)) to the left and push the knob inwards (2) and turn. To release the switch from the blackout position, push the knob inwards.

34.1	Position Tag	-	Direction indicators, hazard warning, headlamp flash, horn normal, stop lamp, reverse lamp, warning lights, map lamp.
34.2	Position "1"	-	As position Tag plus instruments, side lamps and tail lamps, number. plate lamp.
34.3	Position "2"	-	As position "1" plus headlamps, headlamp dipped facilities and rear fog lamp.
34.4	Position "0"	-	All lights off.
34.5	Position "S1"	-	Blackout stop lamp and convoy light.
34.6	Position "S2"	-	Blackout rear tail lamps only.
34.7	Position "S3"	-	Blackout stop lamp, blackout tail lamps, blackout head lamps.

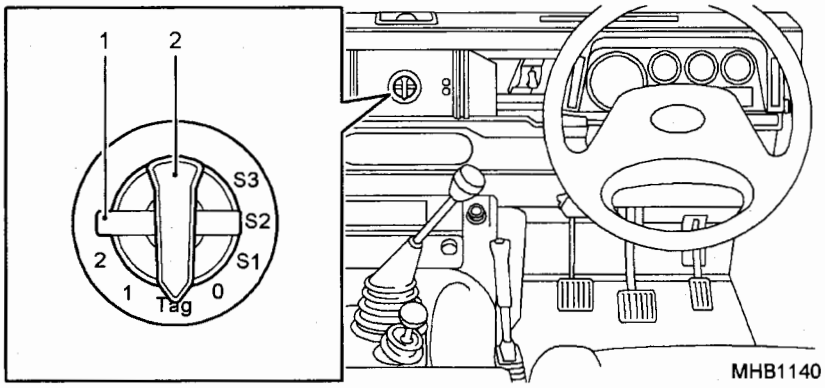

Fig 17 Seven way main lighting switch

INSPECTION SOCKETS

35 The inspection sockets are located to the right of the main lighting switch and are for the purpose of an inspection lamp. The red socket (Fig 18 (2)) is live and the black socket (1) is to earth.

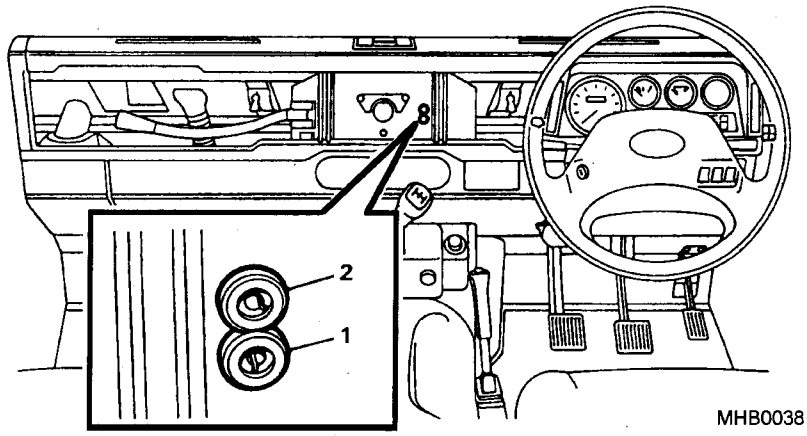

Fig 18 Inspection sockets

HEADLAMP LEVELLING

36 The headlamp levelling switch (Fig 19) is located to the left of the fog guard lights switch. The levelling switch (1) is a two-position rocker switch for laden and un-laden operations of the vehicle.

36.1 Press the upper end of the switch in for an unladen vehicle.

36.2 Press the lower end of the switch in when the vehicle is fully loaded.

MAP READING LIGHT

37 The map reading light (Fig 20) is located on the dash in front of the passenger seat. The light comprises a bulb mounted on the end of a flexible stalk. A rocker switch located below the base of the flexible stalk operates the light. The facility is used to see documents whilst driving at night.

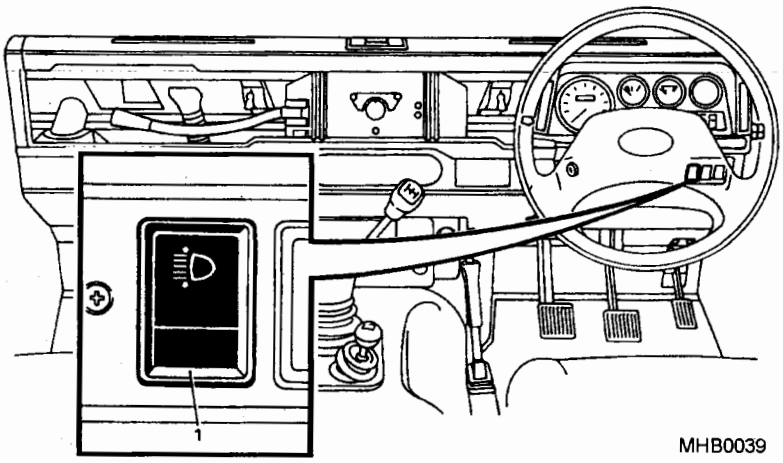

Fig 19 Headlamp levelling switch

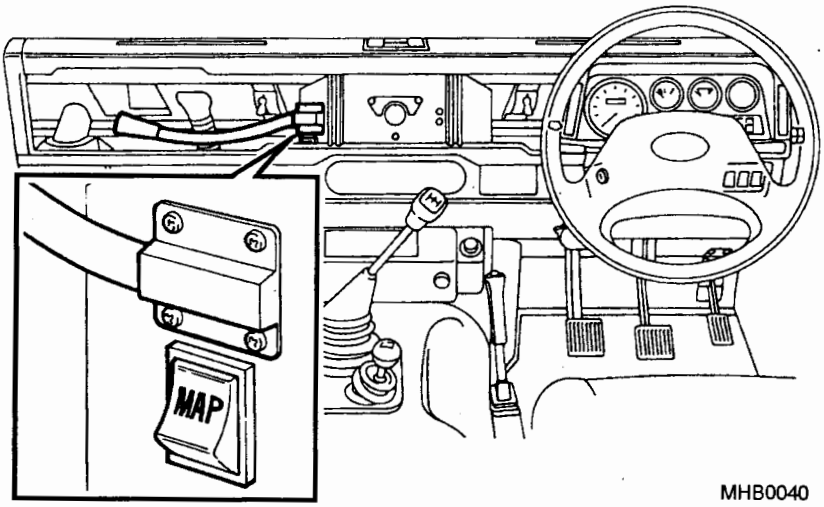

Fig 20 Map reading light

FRESH AIR/HEATING CONTROLS

38 The fresh air/heating controls are located on either side of the instrument panel, the distribution (Fig 21 (3)) and temperature control levers (2) being on the right and the blower motor lever (1) on the left, for the right hand drive vehicles.

The heater controls

39 The heating system delivers fresh air to the windscreen for demisting and to the driving cab interior in variable temperature proportions, between cold and hot according to the control settings. Warm/hot air will be available when the engine reaches normal working temperature.

NOTE

On left hand drive vehicles the distribution and temperature control levers are on the left side and the blower motor lever is on the right side.

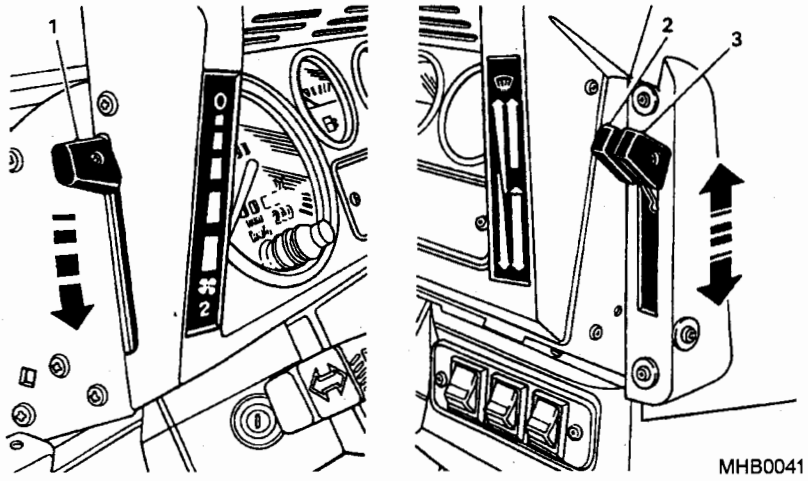

Fig 21 Fresh air/heating controls

39.1 Air distribution control lever. The lever (3) controls the direction of air flow, it has three positions:

39.1.1 With the lever fully up, all the air is directed through the demister vents.

39.1.2 With the lever mid-way, air is directed to the foot level vents and to the screen.

39.1.3 With the lever fully down, air is directed to the foot level vents, although a certain amount will continue to pass through the demister vents.

39.2 Temperature control lever. The lever (2) controls the temperature of the air from the heater unit, it has three positions:

39.2.1 To increase the temperature, move the lever in the direction of the red arrow.

39.2.2 To decrease the temperature, move the lever in the direction of the blue arrow.

39.2.3 Action between the maximum temperature and the minimum temperature is progressive.

39.3 Blower motor lever. The motor will only operate with the starter key turned to the first position or with the engine running. The lever (1) has four positions:

39.3.1 With the lever fully up the heating and ventilation system is inoperative.

39.3.2 Move the lever in a downward motion until a positive click is felt, this is the "ram" position. In this position the air is forced into the vehicle by its forward movement, and then routed and heated as determined by the position of the distribution and temperature controls. When the vehicle is stationary, the system is inoperative.

39.3.3 Move the lever to the second position and this will give a slow blower motor speed.

39.3.4 Move the lever down to the last position and this will give a fast blower motor speed to boost the airflow into the vehicle. Air is routed and heated as determined by the position of the distribution and temperature controls.

PEDALS

40 The brake (Fig 22 (2)), clutch (1) and accelerator (3) pedals are located in the well of the driver's compartment, below the steering wheel console. The pedals are of the pendant type with the brake and the clutch operated hydraulically. The brakes are servo assisted for ease of operation. The accelerator pedal has a mechanical linkage operating a control cable. To operate, depress the appropriate pedal.

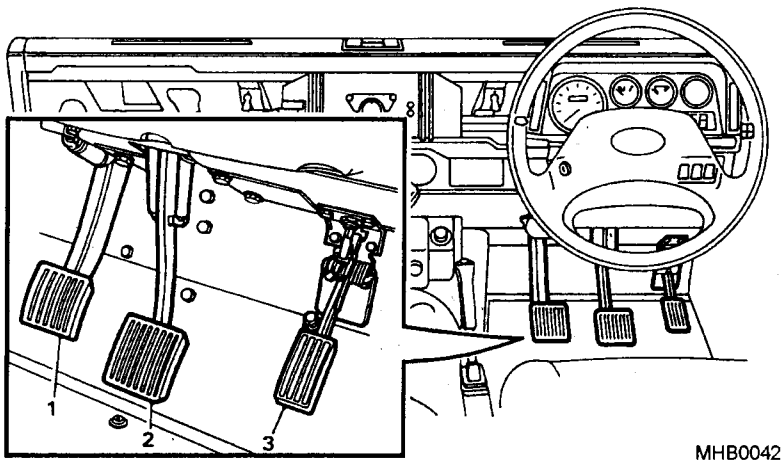

Fig 22 Pedal layout

Foot brake pedal

41 To check the foot brake for correct operation proceed as follows:

41.1 Check that the brake pedal travel is not excessive and maintains a satisfactory pressure under normal working load.

41.2 If the brakes feel spongy this may be caused by air in the hydraulic system. It must be removed by bleeding the system at each wheel cylinder (refer to VM).

BONNET RELEASE HANDLE

42 The bonnet release lever (Fig 23) is located on the front of the vehicle under the front lip of the bonnet. This opens the bonnet as follows:

42.1 Pull the lever, this disengages the locking plate and allows the bonnet to spring open to the limits of the safety catch.

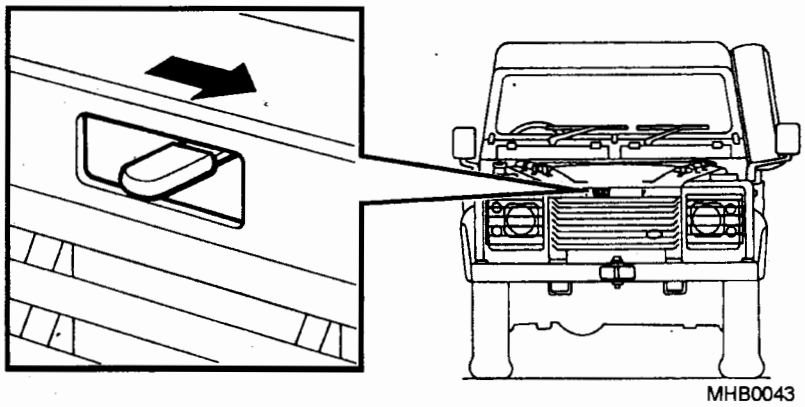

Fig 23 Bonnet release lever

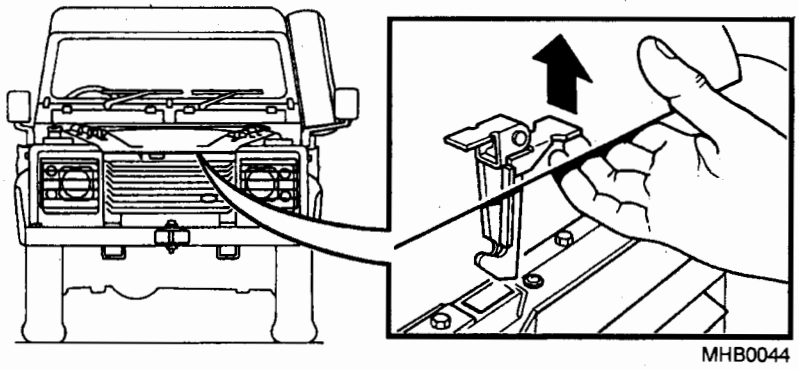

Fig 24 Bonnet safety catch

42.2 To open, insert the hand under the bonnet and locate the safety catch on the left hand side of the vehicle (Fig 24), press upwards, this releases the safety catch and lifts the bonnet clear.

42.3 To close, lower the bonnet into position and apply pressure downwards until the locking mechanism locates in its housing. The bonnet release lever automatically resets itself.

INTER VEHICLE STARTING SOCKET

43 The inter vehicle starting socket (Fig 25) is located on the left hand heelboard under the passenger seat and is used for starting a vehicle, with discharged batteries, from another vehicle.

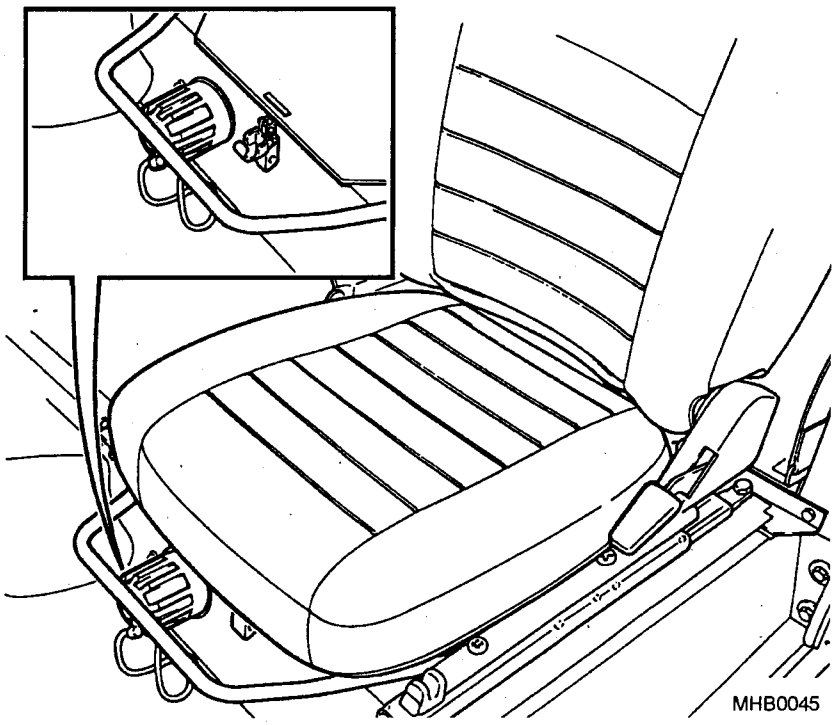

Fig 25 Inter vehicle starting socket

Operation of the socket

44 To use this facility proceed as follows:

44.1 First unscrew the cover from the socket.

44.2 Connect the cable via the pins, to both the vehicles.

44.3 Start the engine of the vehicle which will feed the current.

44.4 Turn the ignition key of the disabled vehicle and feed from the other vehicle will start the engine.

44.5 Disconnect as soon as possible.

44.6 When not in use the cover must be screwed on tight.

BATTERY ISOLATOR SWITCH

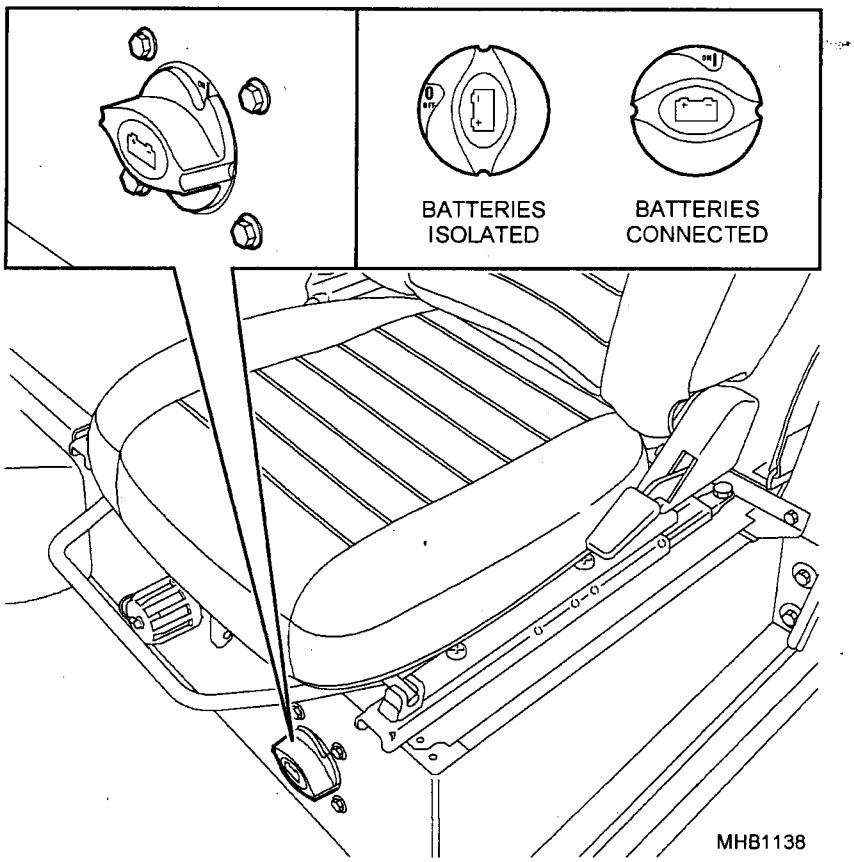

Fig 26 Battery isolator switch

45 The battery isolator switch (Fig 26) is located on the left hand heelboard under the passenger seat and is used to isolate the vehicle batteries.

45.1 Turn the knob anti-clockwise to isolate the vehicle batteries.

FIRE EXTINGUISHER BRACKET

46 The fire extinguisher bracket is situated between the driver and passenger seats on the rear body bulkhead. All personnel should be familiar with the mechanism for releasing the extinguisher.

Operation of the extinguisher

47 The procedure for releasing the extinguisher is as follows:

47.1 Pull the strap (Fig 27 (1)), which releases the retaining bracket.

47.2 The extinguisher (2) may now be removed.

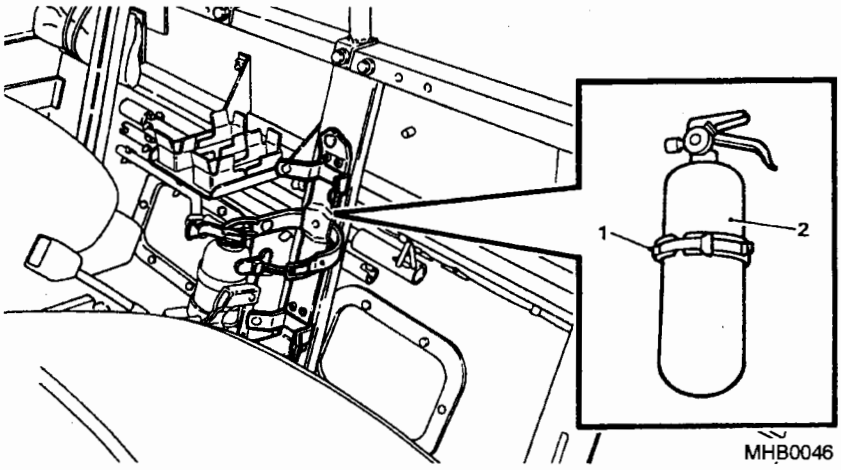

Fig 27 Fire extinguisher bracket

TRANSMISSION HANDBRAKE

48 The handbrake lever (Fig 28) is mounted on the heel board and connects to a drum type transmission brake located on the rear output shaft of the transfer gearbox. To release, pull the lever slightly back, depress the button at the top of the brake handle and push the handle down. The brake is applied by pulling the lever back fully. To check the handbrake operation is satisfactory, engage, and ensure that the brake holds the vehicle properly.

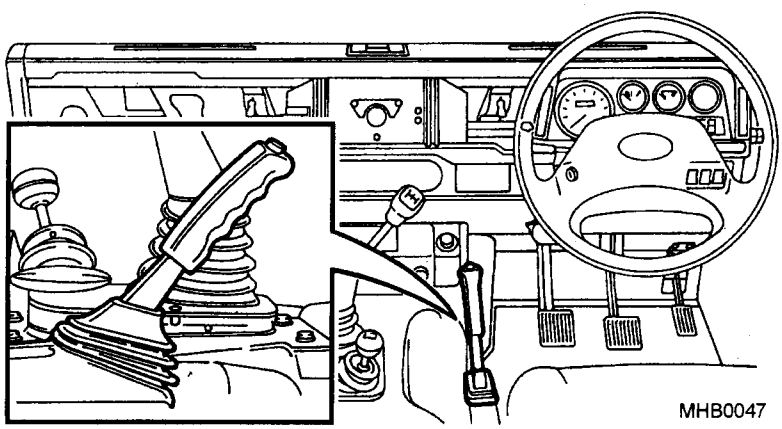

Fig 28 Transmission handbrake lever

TRANSFER GEAR/DIFFERENTIAL LOCK LEVER

CAUTIONS

(1) The vehicle must be stationary when moving the transfer gears from high "H" TO LOW "L".

(2) Engagement of the lock with one or more wheels slipping will cause damage to the transmission.

49 The transfer gear/differential lock lever (Fig 29) is located on the gear box tunnel adjacent to the handbrake lever. The lever controls the selection of the high and low gear ratios and the engagement of the differential lock. The transfer gear/differential lock lever has the six following gear positions:

Fully rearwards right.

50 The transfer gearbox is in high ratio with the differential unlocked. this position is used for normal road work.

Fully rearwards left.

51 The transfer gearbox is in high ratio with the differential locked. The differential lock warning light should be illuminated.

Centre left.

52 The transfer gearbox is in neutral "N" with the differential locked. The differential lock warning light should be illuminated.

Centre right.

53 The transfer gearbox is in neutral "N" with the differential unlocked. In this position drive cannot be transmitted to the road wheels regardless of the position of the main gear selector. Use this position for winching or power take-off (PTO).

Fully forward right.

54 The transfer gearbox is in low ratio with differential unlocked.

Fully forward left.

55 The transfer gearbox is in low ratio with the differential locked. The differential lock warning light should be illuminated.

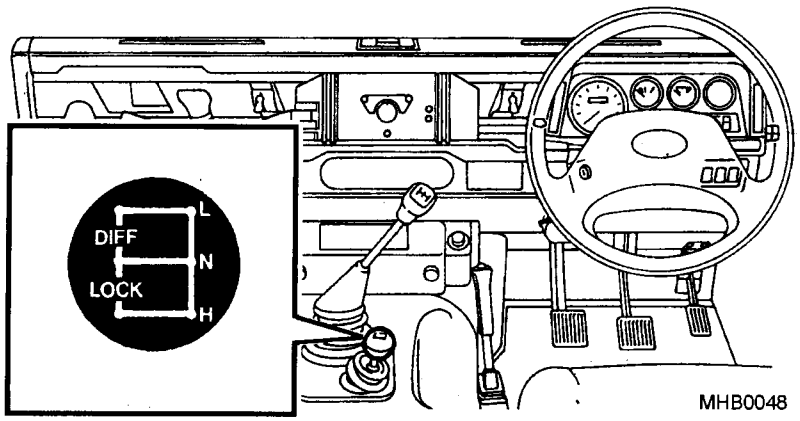

Fig 29 Transfer gear/differential lock lever

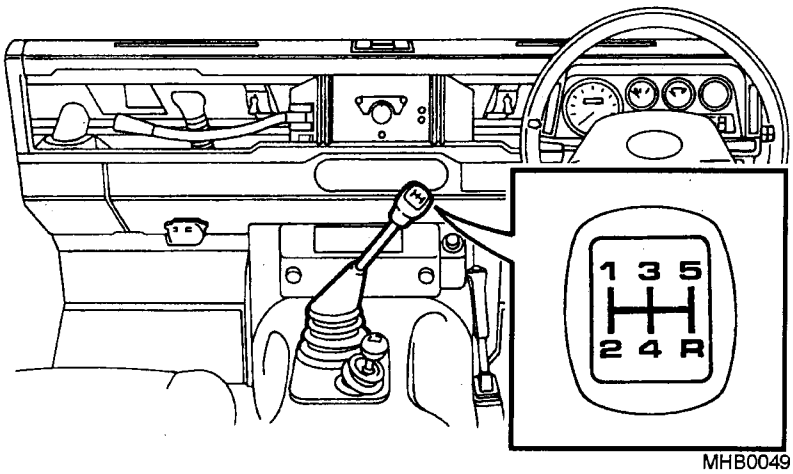

Fig 30 Main gearchange lever

MAIN GEAR CHANGE LEVER

56 The main gearchange lever (Fig 30) is located on the gearbox tunnel adjacent to the transfer gear/differential lock lever. The gear positions are indicated on the lever knob. In the neutral position, spring pressure holds the lever opposite the third and fourth speed gear positions so that slight pressure is required on the lever when selecting the first or second gears. To engage fifth, move the lever to the right as far as possible and forwards to engage the gear. To engage reverse, move the lever to the right as far as possible and backwards to engage the gear.

FUSE BOXES

WARNING

THE UNDERBONNET FUSE BOX CONTAINS FUSES THAT PROTECT THE VEHICLE MAIN HARNESSES. SHOULD ANY OF THESE FUSES FAIL THE VEHICLE MUST BE TAKEN TO THE WORKSHOP AND THE FAULT RECTIFIED IMMEDIATELY.

57 There are two fuse boxes, the main fuse box and the underbonnet fuse box.

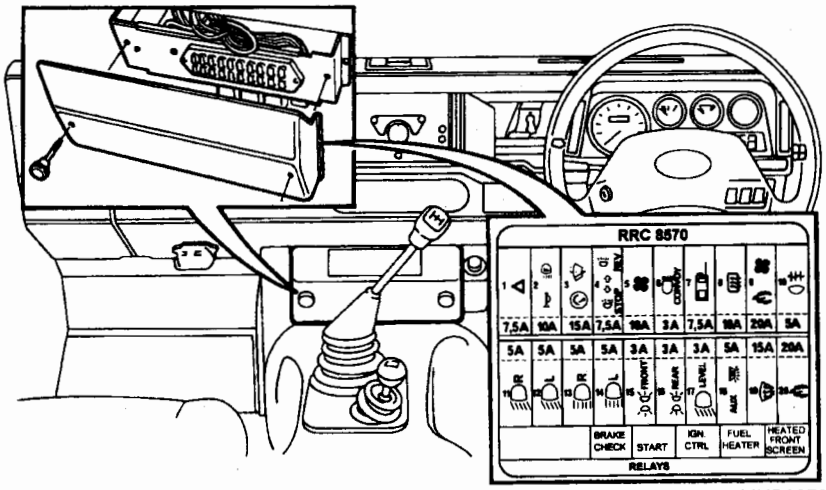

MHB0050

Fig 31 Main fuse box location

Main fuse box

58 The main fuse box (Fig 31) is located inside the vehicle below the fascia, directly in front of the main gear change lever. It contains twenty fuses of the following values: 3; 5; 7.5; 10; 15 and 20 amperes.

Underbonnet fuse box

59 The underbonnet fuse box (Fig 32) located under the bonnet contains 3 fuses of the following values: 20; 30 and 40 amperes.

60 Only spade type fuses of the correct rating should be used as replacements. The location and the items protected by the fuses are shown in the chart attached to the inside of the fuse box cover.

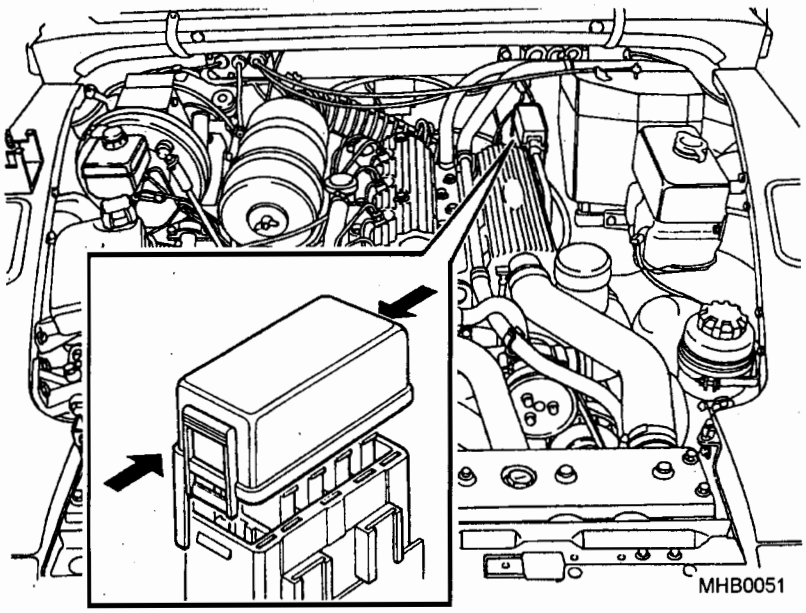

Fig 32 Under bonnet fuse box location

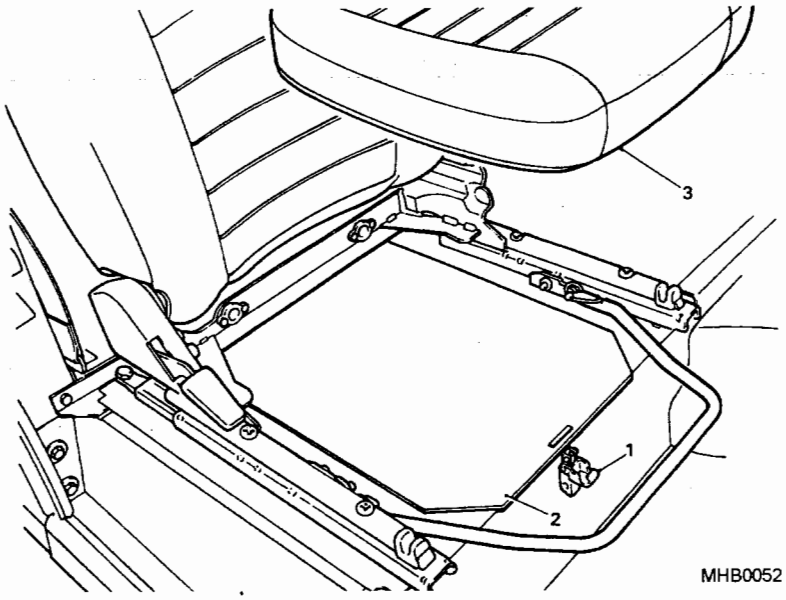

Fig 33 Removing the seat base cover

STOWAGE COMPARTMENTS

61 The stowage compartment for the TUL is located within the battery compartment underneath the left hand seat and for the TUM it is located underneath the right hand seat.

To obtain access to either compartment proceed as follows:

62 Lift off the seat cushion (Fig 33 (3)).

63 Undo the over centre catch (1) and the cover plate (2) from the seat base.

64 The stowage compartment is accessible.

65 Slide the cover back into place and secure using the over centre catch.

66 Replace the seat cushion.

BENCH SEATS

67 There are two (2 seater) bench type seats located in the rear of the TUL vehicles and there are four (2 seater) bench type seats located in the rear of the TUM vehicles.

68 The seat cushions (Fig 34 (1)) can be stowed in an upright position by means of a strap with a metal hook (2) which fastens to the side of the seat.

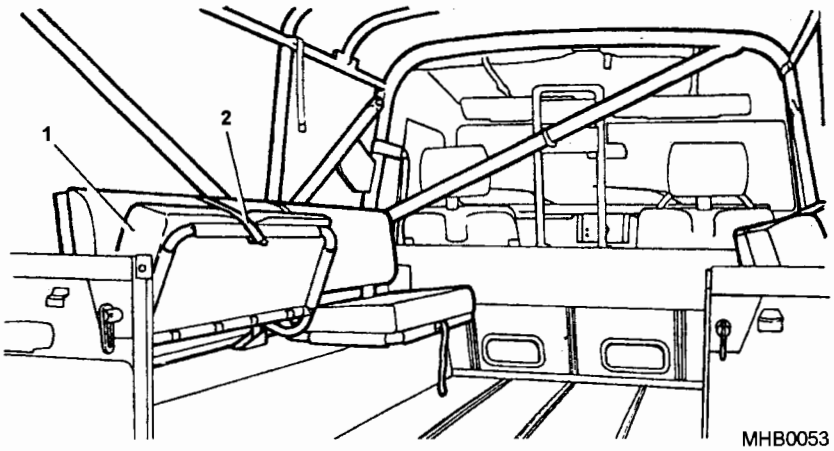

Fig 34 Bench seats

69 To use the seat, release the retaining hook and move the cushion into the horizontal position.

BENCH SEAT BELT STOWAGE

70 To prevent the seat belts (1) from being caught under the frame of the seat when the seat cushion is dropped onto the wheel box, it is recommended that the belts be stowed as shown in Fig 35, with the buckles engaged over the back of the seat (2).

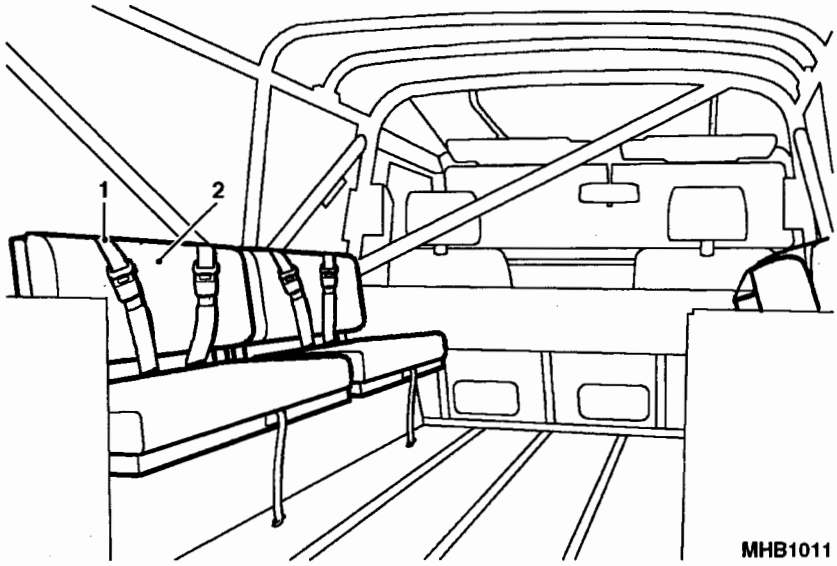

Fig 35 Bench seat belt stowage

70.1

WINDOWS

71 Both parts of the door window are released by operating the window lock control (Fig 36) as follows:

71.1 To release the window move the window lock lever downwards towards the floor of the vehicle.

71.2 Move the front part of the window back, this will then allow the rear part of the window to move forward.

71.3 To lock the windows, close each part of the window and move the lock lever towards the front of the vehicle.

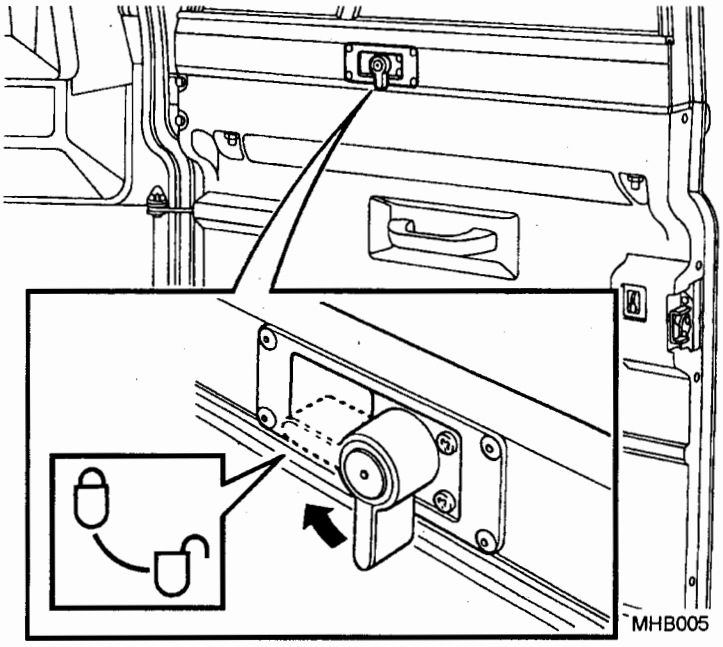

Fig 36 Operating the windows

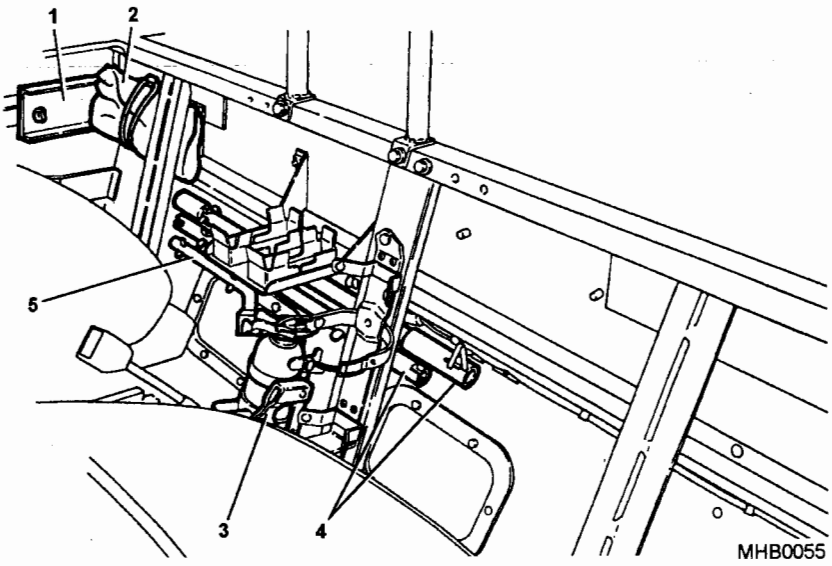

1	Wheel chock	4	Jack handles
2	Tool roll	5	Wheel nut wrench
3	Jack		

Fig 37 Vehicle tool kit

VEHICLE TOOL KIT

72 The vehicle tool kit (Fig 37) is located on the bulkhead behind the driver and passenger seats. Access is gained by moving the seat forward (Paragraphs 9 and 10).

73 The tool roll consists of the following:

73.1 14 x 15 mm Offset ring spanner - 1 off

73.2 17 x 19 mm Spanner - 1 off

73.3 17 mm Combination spanner - 1 off

73.4 10 x 13 mm Spanner - 2 off

73.5 Multi-purpose screw driver - 1 off

73.6 6 mm Allen key - 1 off

73.7 Wading plug - 1 off

INFRARED LIGHTING CONTROLS

WARNING

DO NOT VIEW THE FRONT LAMPS DIRECTLY WITH OPTICAL INSTRUMENTS. IT MAY CAUSE EYE DAMAGE. NIGHT VISION DEVICES MAY BE DAMAGED.

THE SYSTEM PROVIDES SHORT-RANGE ENHANCEMENT OF NIGHT VISION EQUIPMENT. DRIVING SPEEDS MUST BE REDUCED ACCORDINGLY. KEEP THE LAMPS CLEAN FOR MAXIMUM OUTPUT.

NOTE

The main light switch (refer paras 33 and 34) should be set to blackout and the convoy light cover rotated to black out the light when the Infrared lamps are in use.

74 The infrared lighting switches (Fig 38 (3)) are mounted on the centre fascia. The switches are fitted with guards (2) to prevent accidental use. A rotary control (1) is provided to adjust the brightness of the front infrared lamps.

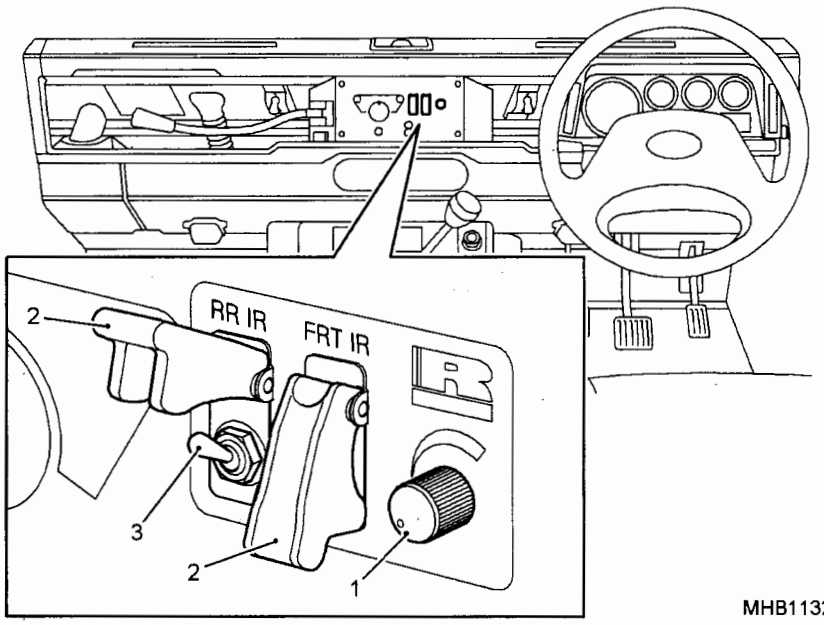

Fig 38 Infrared lighting controls

CHAPTER 2-2

FITTED FOR RADIO (FFR)

CONTENTS

Para

1 Introduction
2 Ammeter
3 Engine hand throttle
4 Auxiliary terminals
5 Fast fuse
6 Radio aerial coaxial stowage box
7 Radio table
8 Radio battery stowage boxes
9 Radio operator seats (WARNING)
10 To relocate the seats
11 Battery isolation switch and power import/export system
12 Relay box and circuit breakers
13 Import/export socket
14 Battery isolation switch
15 Warning buzzer and test button

Fig		Page
1	Ammeter location	2
2	Engine hand throttle	3
3	Auxiliary terminals	4
4	Fast fuse location	5
5	Radio aerial coaxial stowage box	6
6	Radio table and battery stowage box	7
7	Relay box and circuit breakers	8
8	Import/export socket	9
9	Battery isolation switch	10
10	Warning buzzer and test button	11/12

INTRODUCTION

1 This sub-chapter describes all the Controls and Instruments applicable to the Fitted For Radio (FFR) TUL and TUM vehicles that have not been covered by Sub-Chapter 2-1.

AMMETER

2 The ammeter (Fig 1) is located in the centre of the ancillary panel, below the main lighting switch panel. The gauge is graduated and indicates the charge and discharge rate of the radio system batteries.

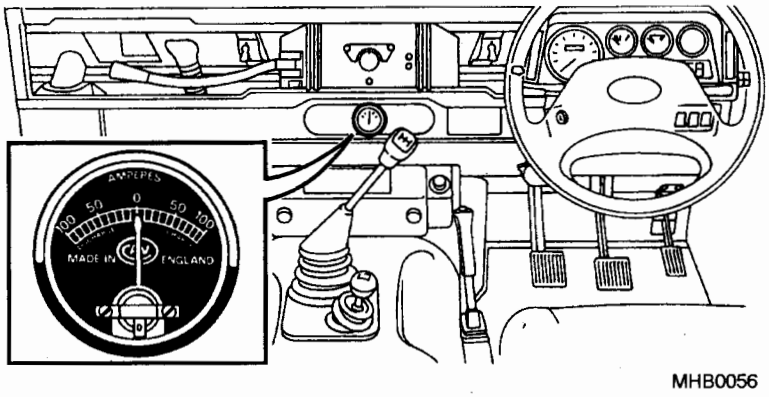

Fig 1 Ammeter location

ENGINE HAND THROTTLE

3 The engine hand throttle (Fig 2) is located adjacent to the steering wheel next to the fuse box. The purpose of the throttle is to over-ride the accelerator pedal linkage when the vehicle is stationary. To set the throttle, pull out to the required speed and twist to lock into place. Before normal road driving is contemplated, check and ensure that the hand throttle is pushed fully down to the closed position.

WARNING

DO NOT USE THE HAND THROTTLE WHILST DRIVING THE VEHICLE.

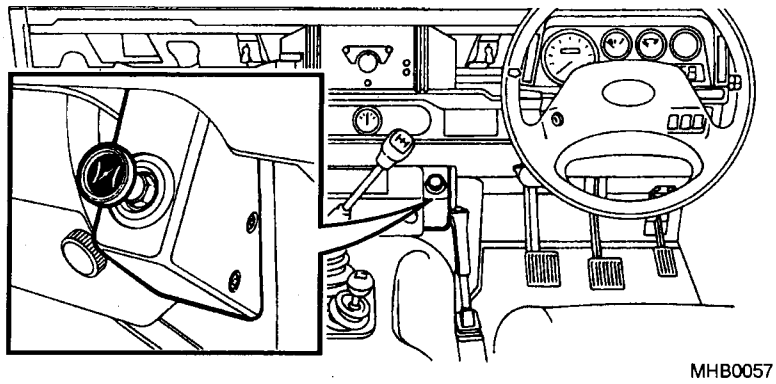

Fig 2 Engine hand throttle

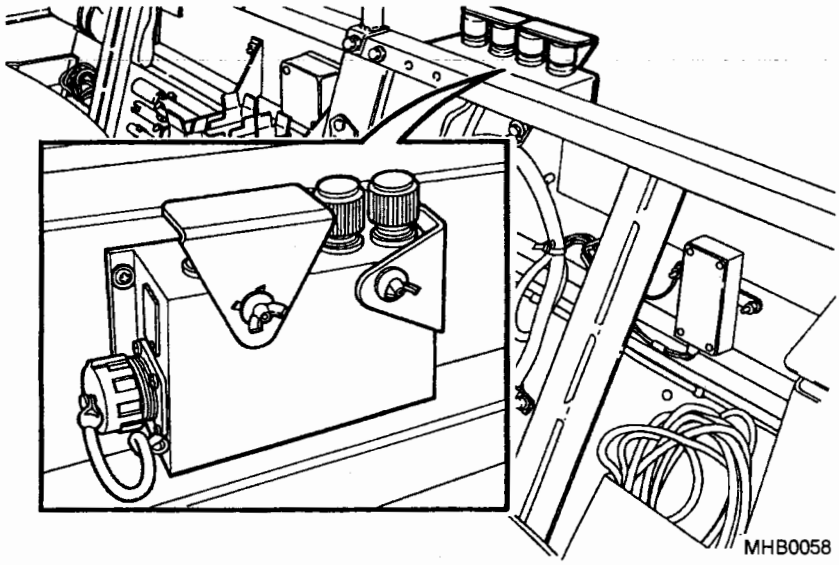

Fig 3 Auxiliary terminals

AUXILIARY TERMINALS

4 The terminal box (Fig 3) is attached to the panel behind the left hand seat. Auxiliary terminals are provided for operating the 24V equipment while the engine is running. The socket on the left hand side is an alternative to the terminals for carrying a charge to the radio from the batteries stored under the table. It is also used for charging additional radio batteries which are housed in the battery stowage box.

FAST FUSE

5 The fast fuse (Fig 4) is located to the bulkhead behind the front seats. The fuse protects the generator circuit using a 80 ampere replaceable link. A spare link is also contained within the box. To replace the fuse link (refer to Chapter 4-2 paragraph 4.1).

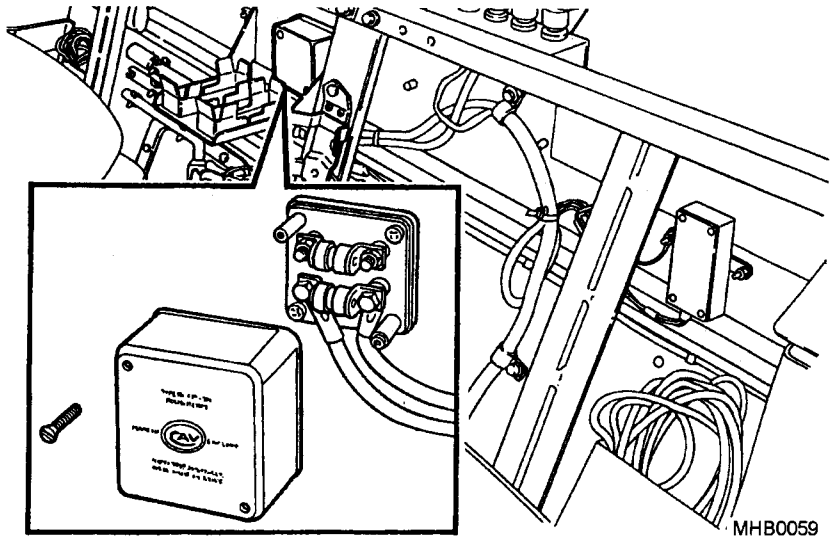

Fig 4 Fast fuse location

RADIO AERIAL COAXIAL STOWAGE

6 The two radio aerial coaxial stowage compartments (Fig 5) are located on the bulkhead behind the seats. They provide a safe and compact stowage for the aerial leads (1) when they are not in use.

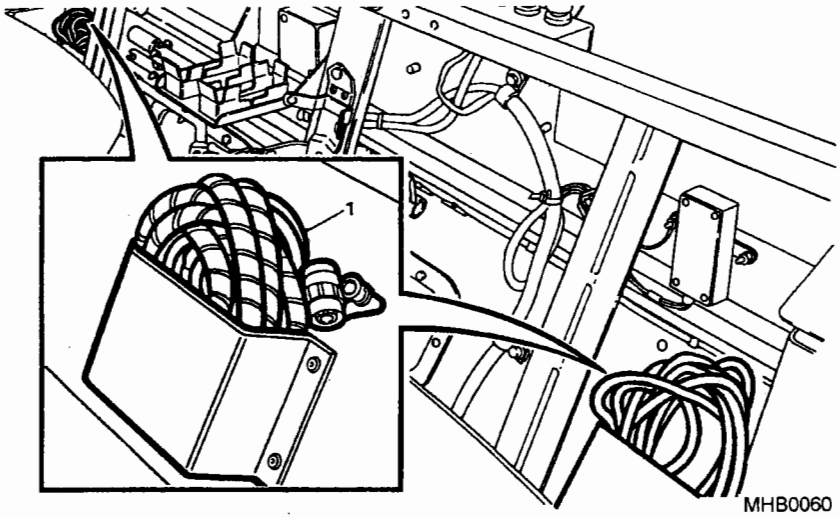

Fig 5 Radio aerial coaxial stowage boxes

RADIO TABLE

7 The radio table (Fig 6 (1)) is located immediately in front of the vehicle bulkhead and supports one or two radio sets. It is supported by and bolted to the radio battery stowage. The table top is earthed by copper braids, (2) bolted to the sides of the vehicle.

RADIO BATTERY STOWAGE BOX

8 The battery stowage box (3) is located directly underneath the radio table and contains two battery trays. The trays have the capability of holding two 12 volt 100 amp hour radio batteries each.

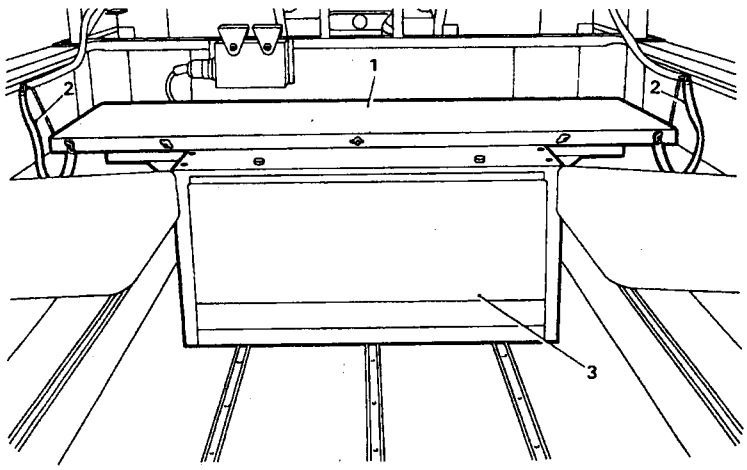

Fig 6 Radio table and battery stowage box

RADIO OPERATORS SEATS

WARNING:

THE RADIO OPERATORS SEAT IN THE BACK OF A TUL/TUM(HS) FFR VEHICLE IS NOT PERMITTED TO BE USED AS A SEAT FOR THE TRANSPORTATION OF PERSONNEL, UNLESS IN AN EMERGENCY SITUATION, WHERE A LOCAL UNIT COMMANDER CAN MAKE THE DECISION TO PLACE SOMEONE IN THE BACK.

9 The two radio operator's seats are located into cleats attached to the vehicle. These are situated adjacent to the radio table, therefore giving easy access to the radio.

To relocate the seat

10 Remove the seat from the retaining cleats mounted on the side of the vehicle and re-position in any of the five positions on the side of the vehicle.

BATTERY ISOLATION SWITCH AND POWER IMPORT/EXPORT SYSTEM

11 The battery isolation switch and power import/export system comprises of the following components:

Relay box and circuit breakers

12 The relay box (Fig 7) is mounted on the rear bulkhead next to the auxiliary terminal box. It controls the import/export system and contains two circuit breakers (1) to protect the auxiliary screw terminals (100A) and the power export socket (40A).

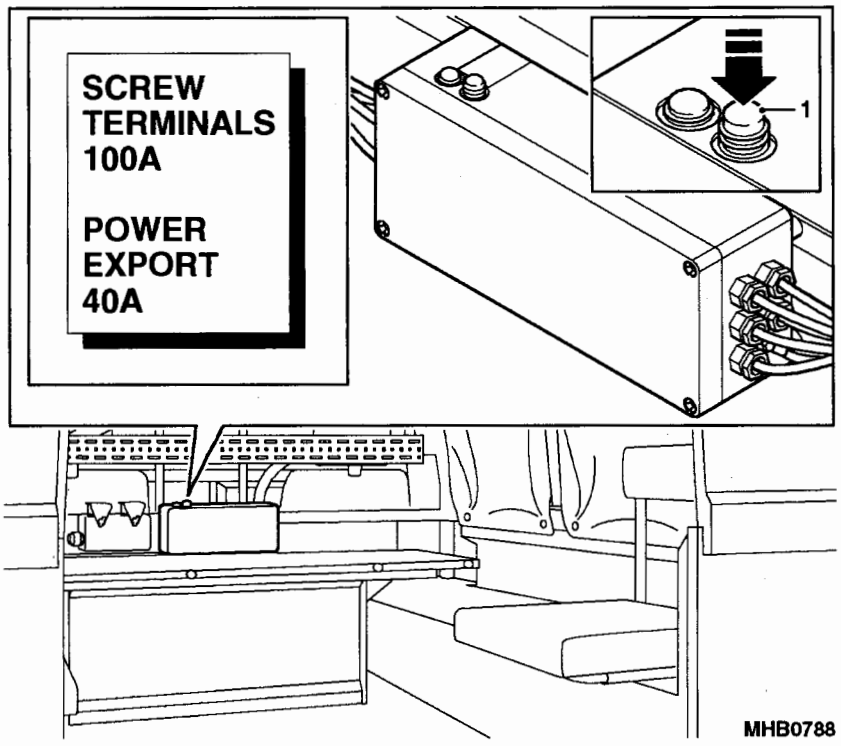

Fig 7 Relay box and circuit breakers

Power Import/export socket

13 The power import/export socket (Fig 8) is located inside the rear of the vehicle to the right of the tailgate opening. It allows electrical power to be imported from an external generator or exported from the vehicle charging circuit.

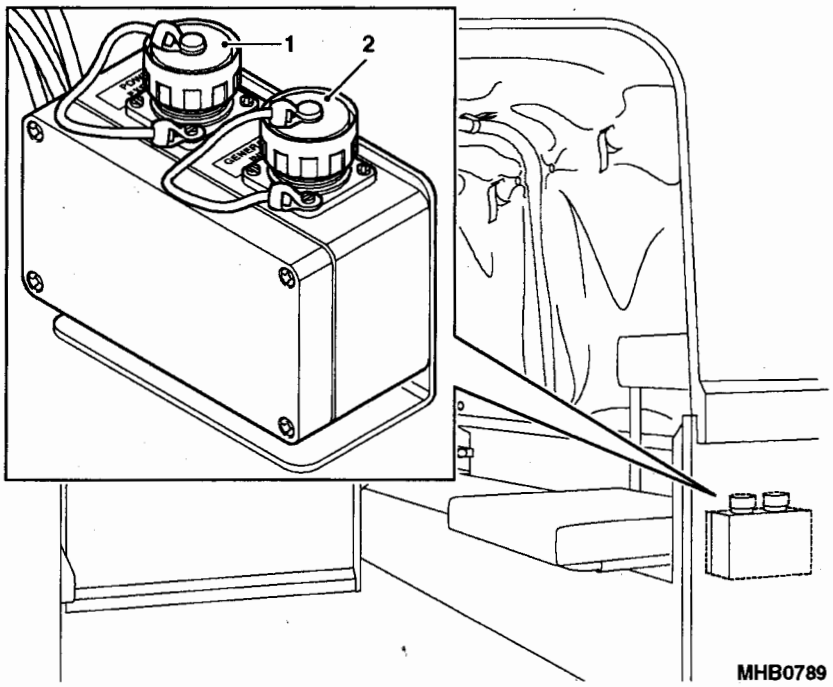

Fig 8 Power import/export socket

Battery isolation switch

14 The isolation switch (Fig 9) is mounted on the roll cage for easy access. Power to both the auxiliary screw terminals and the power export socket can be disconnected quickly in the event of an emergency or for maintenance.

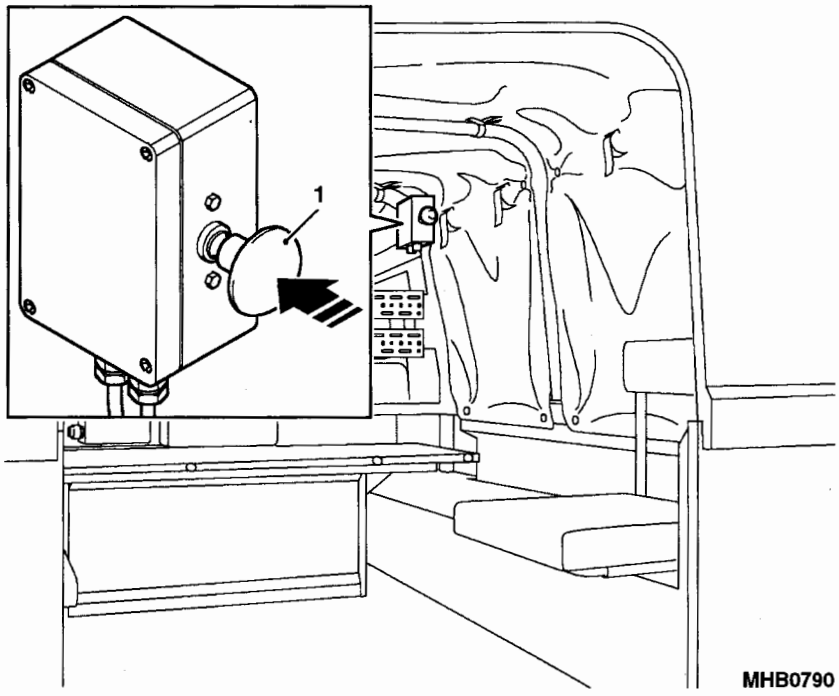

Fig 9 Isolation switch

Warning buzzer

15 The warning buzzer and test button are located inside the radio battery box. They are provided for testing the radio battery circuit after the batteries have been removed and replaced, to prevent the possibility of incorrect re-connection.

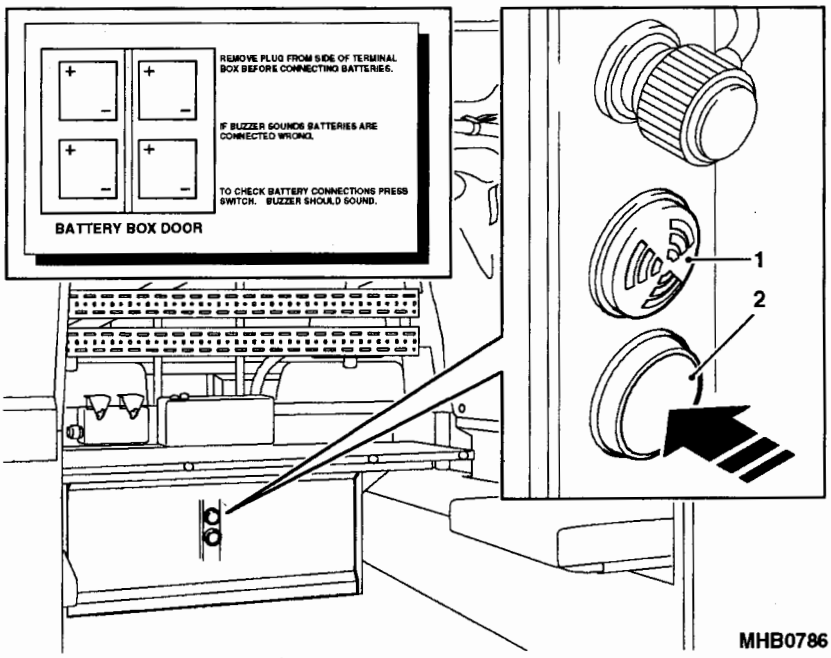

1 Test button 2 Warning buzzer

Fig 10 Warning buzzer and test button

CHAPTER 2-3

FIELD AMBULANCE

CONTENTS

Para

1 Introduction
2 Operating walk-through door
3 Opening the door from the cab
4 Closing the door from the cab
5 Opening the door from inside the ambulance compartment
6 Closing the door from inside the ambulance compartment
7 Operating rear doors
8 Opening and closing the doors from the outside
Open right hand door
Open left hand door
Close left hand door
Close right hand door
9 Opening and closing the doors from inside the ambulance compartment
Open right hand door
Open left hand door
Close left hand door
Close right hand door
11 Vehicle fascia
12 Blue flashing beacon switch
13 Siren switch
15 Inspection sockets
16 Interior cab light switch
17 Fire extinguisher bracket
18 Releasing the fire extinguisher
20 Stowage compartment
21 Power distribution panel
22 Lights
Lighting control switch
23 Inspection light switch
24 Heater control switch (CAUTIONS)
25 Resuscitator sockets
26 Circuit breakers (WARNING)

(continued)

CONTENTS (continued)

27 Ventilator fan control
28 Oxygen outlets
29 Resuscitator sockets
30 Fresh air vents
31 Recirculation vents
32 Personal and medical equipment
33 Oxygen bottle stowage
35 Floodlight
36 Equipment stowage
38 Stowage locations

Fig		Page
1	Walk-through-door operation	3
2	Rear door operation	4
3	Blue flashing beacon switch	5
4	Siren switch	6
5	Inspection sockets	7
6	Interior cab light switch	7
7	Fire extinguisher bracket	8
8	Overhead stowage area	9
9	Power distribution panel	10
10	Lighting control switch	11
11	Inspection light switch	11
12	Heater control switch	12
13	Ventilator fan control	14
14	Oxygen and resuscitator sockets	15
15	Fresh air and recirculation vents	16
16	Oxygen bottle stowage	17
17	Equipment stowage	19/20

INTRODUCTION

1 This sub-chapter describes all the items applicable to the (TUM) Ambulance HS.

OPERATING WALK-THROUGH DOOR

2 To open and close the walk-through door (Fig 1) in the bulkhead:

Opening the door from the cab

3 Lift the door handle, against spring pressure, and push the door open. Release the handle.

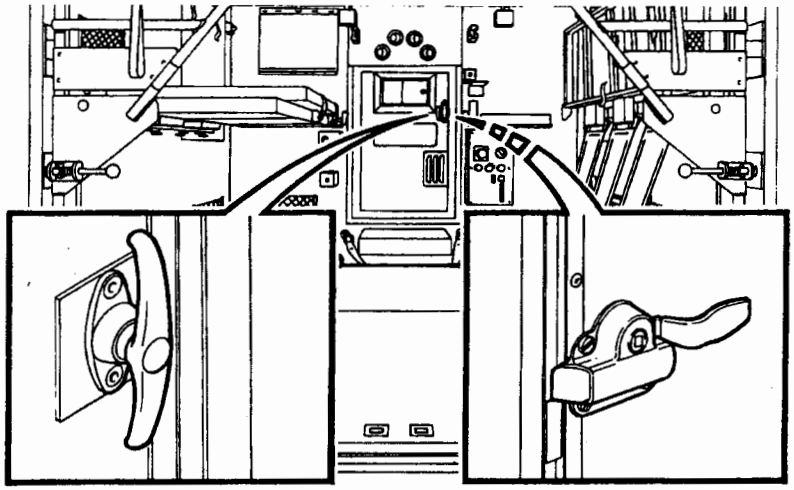

MHB0146

Fig 1 Walk-through door operation

Closing the door from the cab

4 Pull the door closed and release the handle.

Opening the door from inside the ambulance compartment

5 Turn the tee-handle clockwise, against spring pressure, and pull the door open. Release the handle.

Closing the door from inside the ambulance compartment

6 Push the door closed and release the handle.

OPERATING REAR DOORS

7 The rear doors (Fig 2) can be opened and closed from outside the vehicle or from the ambulance compartment as follows:

Opening and closing the doors from the outside

8 To open, insert key in lock of right-hand door handle. Turn key anti-clockwise, then remove key from lock.

8.1 Open right-hand door. Turn door handle fully clockwise and then pull door open. Swing the door round to the side of the vehicle.

8.2 Open left-hand door. On the inside of the door, pull the door handle fully down and then push door open. Swing the door round to the side of the vehicle.

8.3 Close left-hand door. Swing the door round to the closed position. Inside the vehicle, raise the door handle fully.

8.4 Check that the latches engage correctly at the top and bottom of the door.

8.5 Close right-hand door. Swing the door round to the closed position. Turn the door handle fully anti-clockwise.

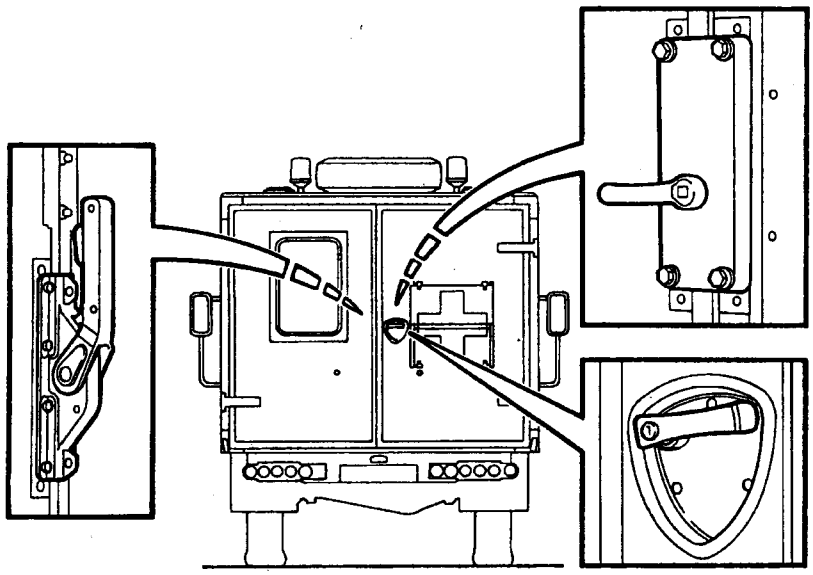

MHB0147

Fig 2 Rear door operation

Opening and closing the doors from inside the ambulance compartment

9 Opening the doors:

9.1 Open right-hand door. Turn the door handle fully anti-clockwise and then push the door open. Swing the door round to the side of the vehicle.

9.2 Open left-hand door. Pull the door handle fully down and the push the door open. Swing the door round to the side of the vehicle.

10 Closing the doors:

10.1 Close left-hand door. Swing the door round to the closed position. Inside the vehicle, raise the door handle fully. Check that the latches engage correctly at the top and bottom of the door.

10.2 Close right hand door. Swing the door round to the closed position. Turn the door handle fully clockwise. Check that the latches engage correctly at the top and bottom of the door.

VEHICLE FASCIA

11 The vehicle fascia displays the instruments and controls required by the operator when driving the vehicle.

BLUE FLASHING BEACON SWITCH

12 This is a two position, rocker type switch (Fig 3) located to the right of the main lighting switch. When the lower half of the switch is pressed in, the lights in the roof-mounted beacons will operate.

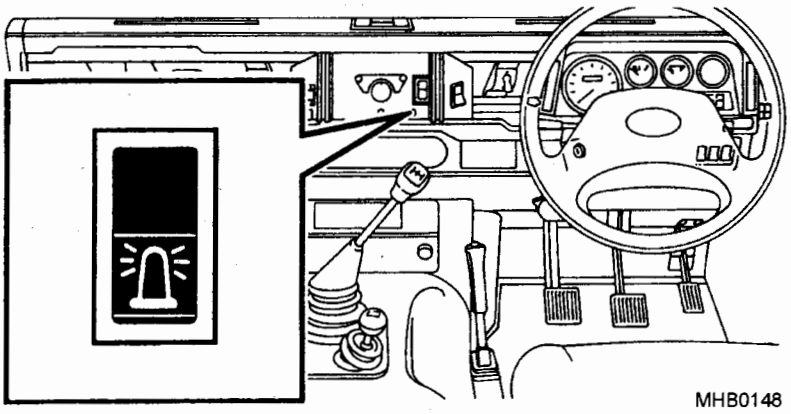

Fig 3 Blue flashing beacon switch

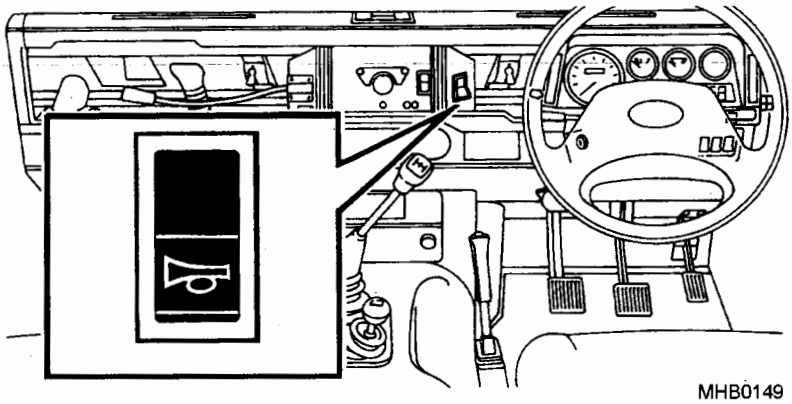

Fig 4 Siren switch

SIREN SWITCH

13 The siren switch is a two position, rocker type switch (Fig 4) located to the right of the blue flashing beacon switch. When the lower half of the switch is pressed in, the siren located on the front of the vehicle cab will operate via the horn column stalk.

Siren operation

14 After the siren has been switched on at the dash (para 13), there are 3 warning sounds that can be used, these are as follows:

14.1 Yelp – Push the stalk in once to gain this sound.

14.2 Wail – Push the stalk in again to gain this sound.

14.3 Two tone – Push the stalk in yet again to gain this sound.

14.4 When the stalk is pushed in two times in quick succession the siren will stop.

INSPECTION SOCKETS

15 The inspection sockets are located to the right of the main lighting switch and provide electrical supply for an inspection lamp. The red socket (Fig 5 (2)) is live and the black socket (1) is to earth.

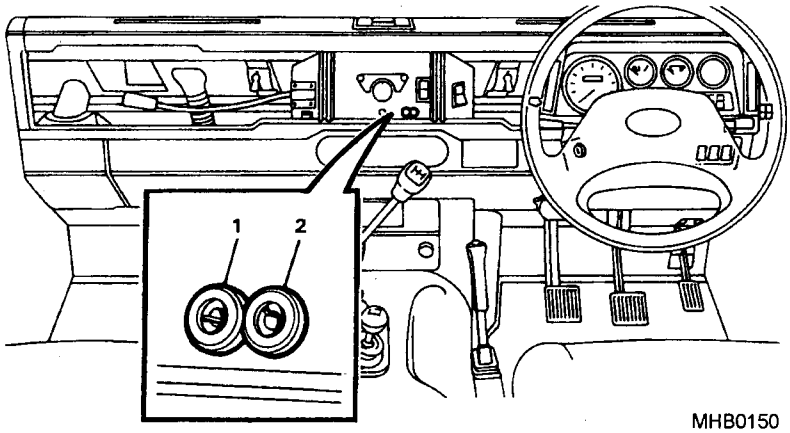

Fig 5 Inspection sockets

INTERIOR CAB LIGHT SWITCH

16 This is a two position rocker switch (Fig 6) located to the left of the hazard warning switch. Press the lower end of the switch in to turn the light ON. Press the upper end of the switch in to turn the light OFF.

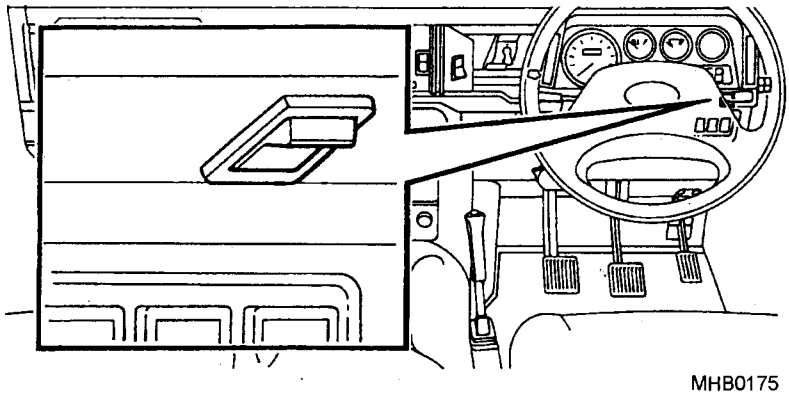

Fig 6 Interior cab light switch

FIRE EXTINGUISHER BRACKET

17 The fire extinguisher bracket (Fig 7) is situated between driver and passenger above the gearbox access cover. All personnel should be familiar with the mechanism for releasing the extinguisher.

Releasing the fire extinguisher

18 Pull the strap (1), which releases the retaining bracket.

19 The extinguisher (2) may now be removed from the stowage.

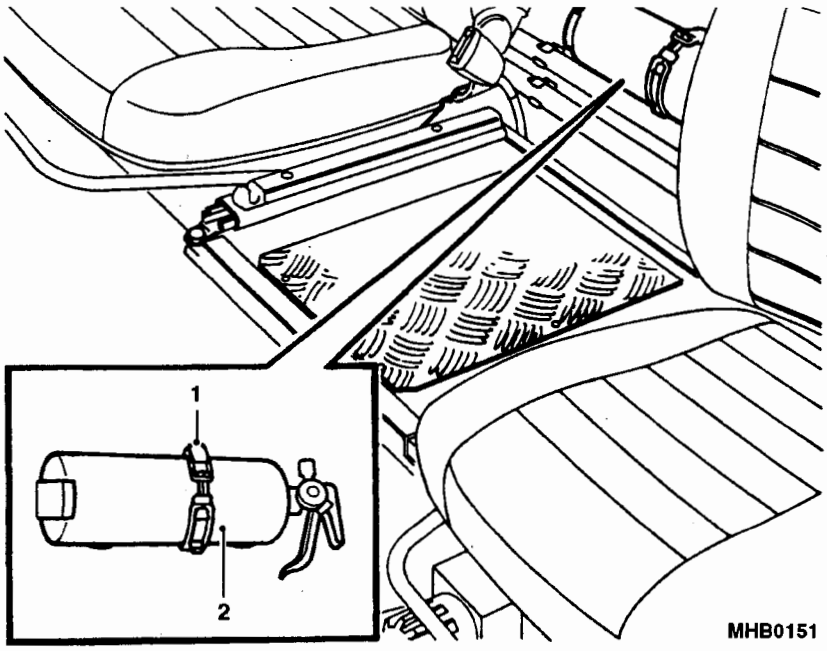

Fig 7 Fire extinguisher bracket

STOWAGE COMPARTMENT

20 The personnel kit stowage area is located on the right hand side of the cab, above head height, with a canvas cover (Fig 8). Turn buttons on the roof of the vehicle cab fastens this. A rifle is placed in a stowage area located on the front panel to the side of the left hand seat.

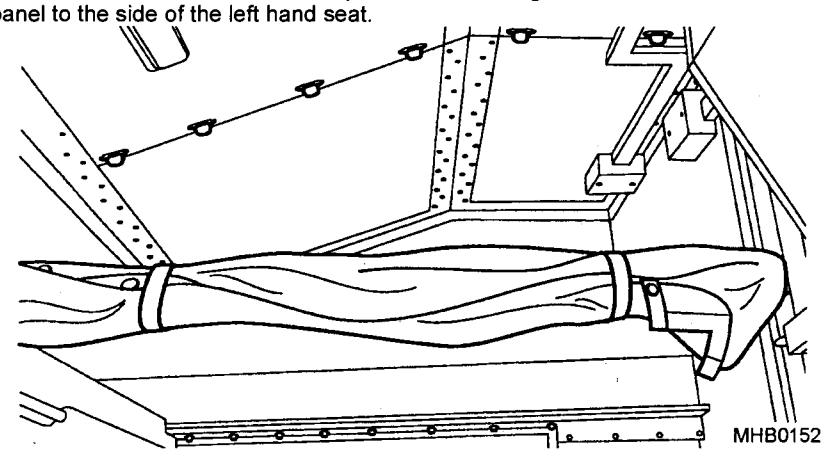

Fig 8 Overhead stowage area

POWER DISTRIBUTION PANEL

21 The power distribution panel (Fig 9) is located on the bulkhead and contains various switches and controls.

Lights

22 The lighting control switch (Fig 10) is a 4-position rotary switch and marked OFF/BLUE/BLACK-OUT/WHITE. This controls the roof-mounted fluorescent lights and blue moonlight. When black-out is selected the moonlight is also controlled by microswitches with the opening and/or closing of the bulkhead and rear doors.

22.1 OFF - All lights are off

22.2 BLUE - Moonlight on, Fluorescent lights off

22.3 BLACK-OUT - While both the rear doors and bulkhead door are closed the fluorescent lights are on. The moonlight is off.

22.4 When either the rear or bulkhead doors are opened, microswitch operation will cause the fluorescent lights to extinguish and the moonlight to illuminate.

22.5 WHITE - Fluorescent lights on, moonlight off.

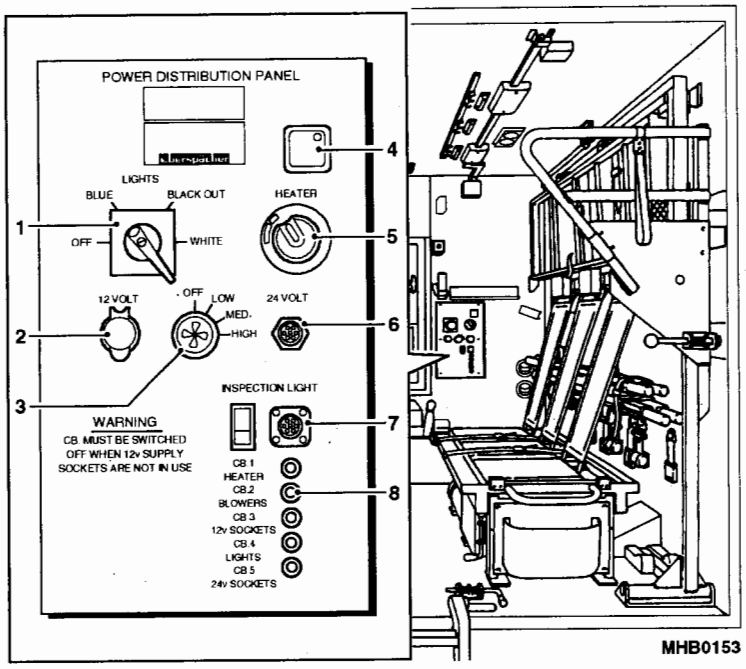

1	Lights	5	Heater control switch
2	12 volt Resuscitator socket	6	24 volt Resuscitator socket
3	Ventilator fan control	7	Inspection light
4	Temperature sensor	8	Circuit breakers

Fig 9 Power distribution panel

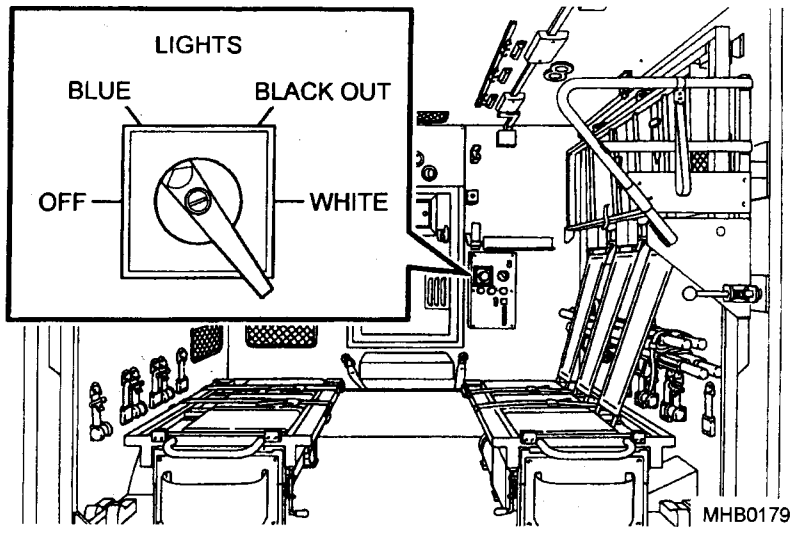

Fig 10 Lighting control switch

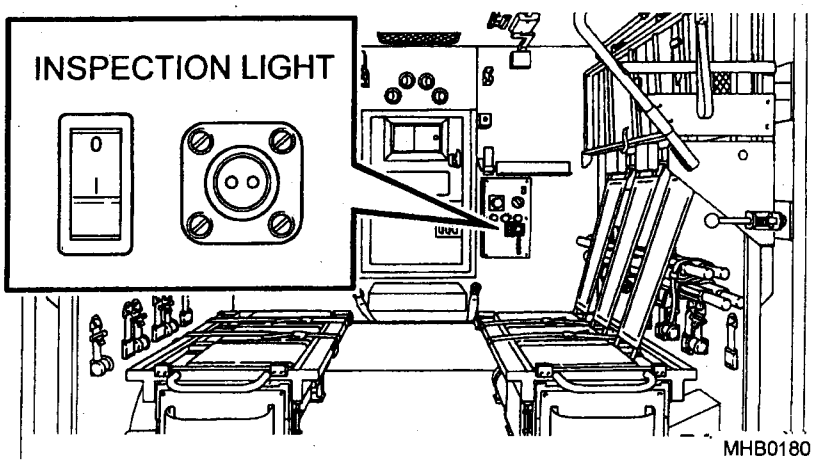

Fig 11 Inspection light switch

Inspection light switch

23 This is stowed in a compartment within the ambulance and can be plugged into a socket (Fig 11) on the power distribution panel. The light is switched on via the rocker switch adjacent to it.

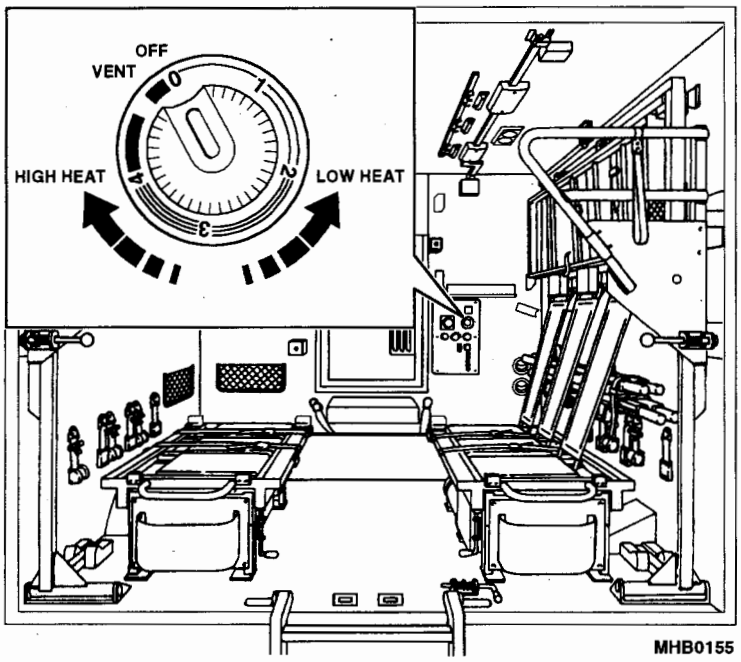

Fig 12 Heater control switch

Heater control switch

24 The heater (Fig 12) is controlled by a rotary switch and has graduations marked from 0 (OFF) to 4 (MAX).

CAUTIONS

1 HEATER STARTING. To prevent the heater from "locking out" do not try to start the heater more than four times (refer to Cat 512 Chap 18-2).

2 HEATER OPERATION. Before switching on the Eberspacher heater ensure the outside fresh air grille is OPEN.

24.1 Operation. To operate the heater move the switch progressively to the number 4 position. Return the switch to 0 to turn the heater OFF.

24.2 Pilot light. A green pilot light situated in the sensor (Fig 9 (4)) illuminates to indicate that the heater is operating.

NOTE

After shut-off there is an automatic, delayed, shut-off period to allow the heater unit to cool down.

24.3 Arctic conditions. When operating in arctic conditions (-31° C) the starting procedure is as follows.

24.3.1 Ensure that all fresh air vents are closed (including the external grille) and the recirculation vents are open.

24.3.2 Start the heater following the above instructions (Para 23.1) adhering to the Cautions.

24.3.3 Once the temperature within the compartment has been reached (18° C), the fresh air vents can be opened too allow fresh clean air to circulate.

RESUSCITATOR SOCKETS

25 There are two resuscitator socket outlets, one 12volt (Fig 14 (2)) and one 24 volt (6) incorporated into the panel.

Circuit breakers

WARNING

USAGE. CB.3 MUST BE SWITCHED OFF WHEN 12V SUPPLY SOCKETS ARE NOT IN USE.

26 There are five circuit breakers (8) contained in the panel and they protect the following circuits.

26.1 CB.1 – Heater

26.2 CB.2 - Blowers

26.3 CB.3 - 12 volt socket

26.4 CB.4 - Lights

26.5 CB.5 - 24 volt sockets

Ventilator fan control

27 This is a rotary switch (Fig 13) with four settings as follows.

27.1 Off - the fan is non-operational.

27.2 Low - The fan operates at a low speed.

27.3 Med - The fan operates within the middle range

27.4 High - The fan operates at its optimum level.

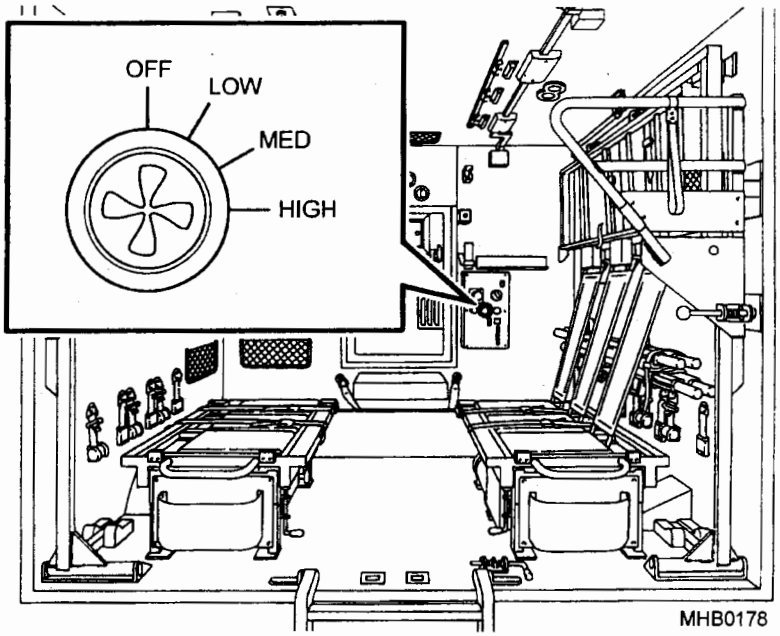

Fig 13 Ventilator fan control

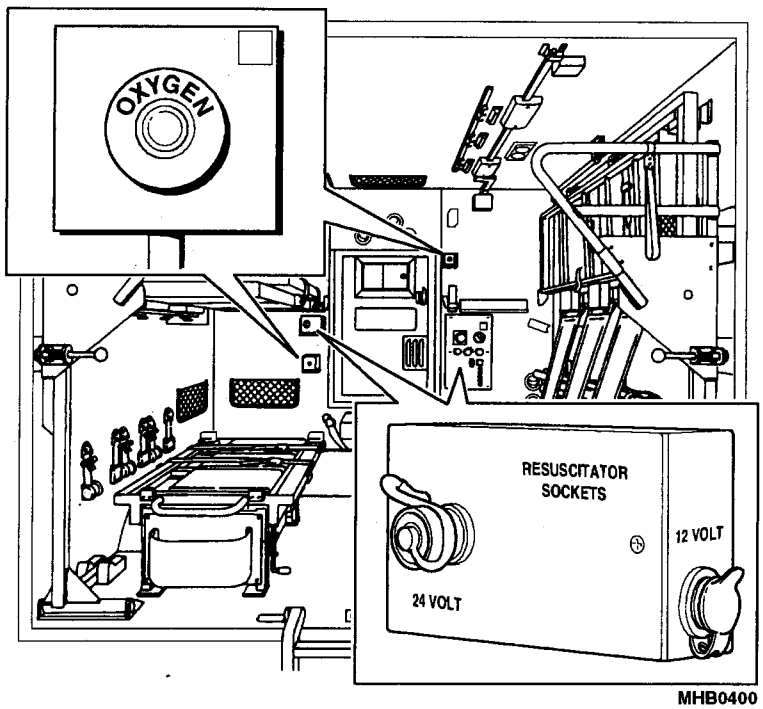

Fig 14 Oxygen and resuscitator sockets

OXYGEN OUTLETS

28 There are two oxygen outlets (Fig 14), one on either side of the walk-through door on the rear bulkhead. These are connected to the oxygen bottles stowed on the floor beneath the lower stretcher carriers. To operate:

28.1 Insert the pipe and oxygen should flow.

28.2 To stop the flow release the pipe from the connection.

Resuscitator sockets

29 As well as the two resuscitator sockets (Fig 14) on the distribution panel there are two more located on the left-hand side of the walk-through door, mounted on a box. These are a 24 volt socket and a 12 volt socket.

FRESH AIR AND RECIRCULATION VENTS

Fresh air vents

30 There are positioned around the ambulance fresh air vents (Fig 15 (1)). These are positioned above the walk through door and in the roof of the compartment. They can be rotated and opened to any ensure a continuous flow of air in any given direction.

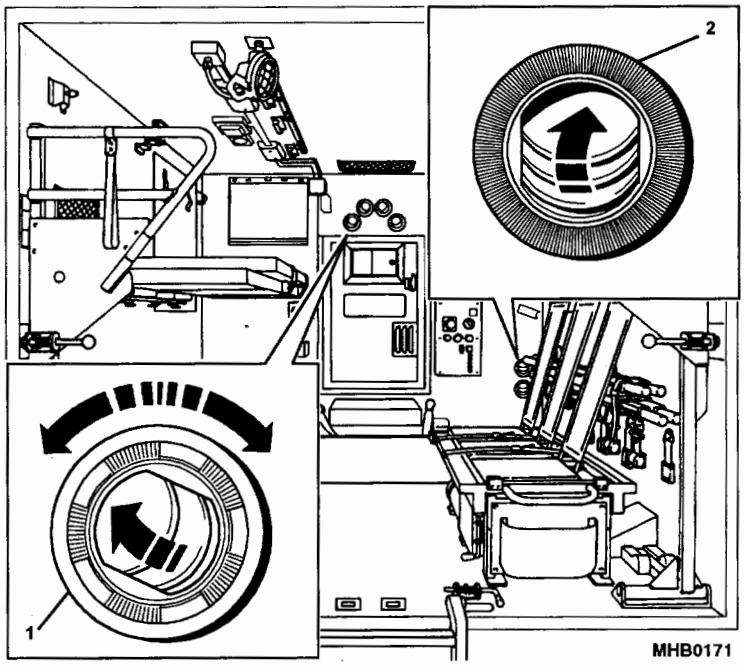

Fig 15 Fresh air and recirculation vents

Recirculation vents

31 There are two vents (2) positioned to the right and below the distribution panel. These allow the air to be recirculated to and from the heater when operating in arctic conditions.

PERSONAL AND MEDICAL EQUIPMENT

32 There are various stowage areas for the stowing of personal and medical equipment. These are in the luton (vehicle cab) and inside the ambulance compartment as follows:

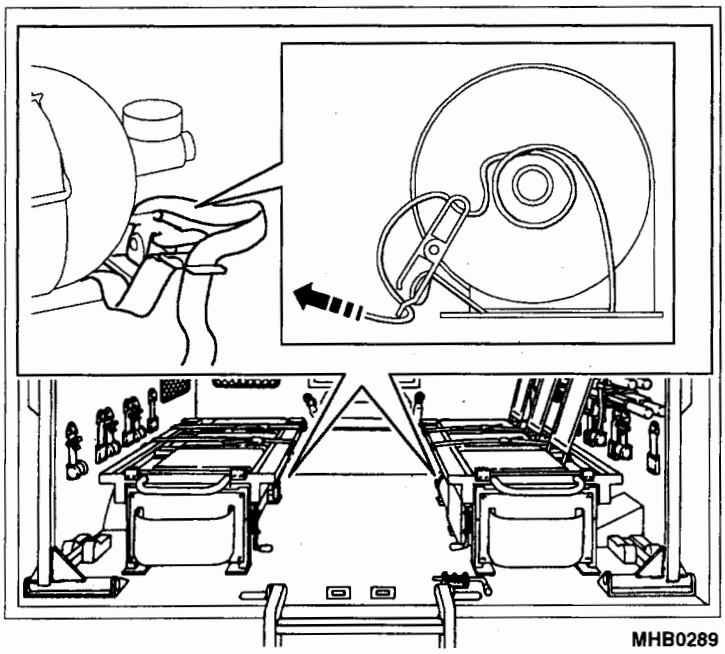

Fig 16 Oxygen bottle stowage

Oxygen bottle stowage

33 These are located on the floor of the compartment on either side of the vehicle under the stretcher frames. The stowages comprise two support brackets and three straps, which hold and retain a single oxygen cylinder.

34 To prevent the oxygen bottle from sliding forward in the stowages under heavy braking it is important to ensure that the forward restraining strap is correctly located around the neck of the bottle. (See Fig 16).

Floodlight

35 This is mounted on a swivel-bracket in the roof in front of the main doorway. The floodlight electrical plug connects to a roof-mounted socket supplied through the power distribution panel. A switch on its rear casing operates the floodlight. To turn the light on push the switch to the up position and to switch it off press the switch down.

Equipment stowage

36 The following items are stowed in each of the areas (Fig 17).

36.1 (A) Six Pillows; Eight Blankets; One Bed roll.

36.2 (B) Ruck sack; Scoop stretcher; Box of infusion bottles; Red canvas holdall - splint; Blue canvas holdall - splint; Oxygen bottle (spare); Quick wipe paper towels (may be attached to wall by bracket); Head light; Plastic pipe and oxygen mask; Stiffneck brace; four 5 litre water bottles and Latex gloves.

36.3 (C) Bed pan/urinal

36.4 (D) Yellow polythene bags; Orange jacket; Wad of aprons and two Flasks.

NOTE

The Latex gloves and Wad of aprons can also be stowed in the 6 string pockets attached to the compartment walls.

36.5 Two in-service oxygen bottles which are attached to the floor under the stretchers.

37 At all times the medic takes final responsibility for the stowage of the equipment.

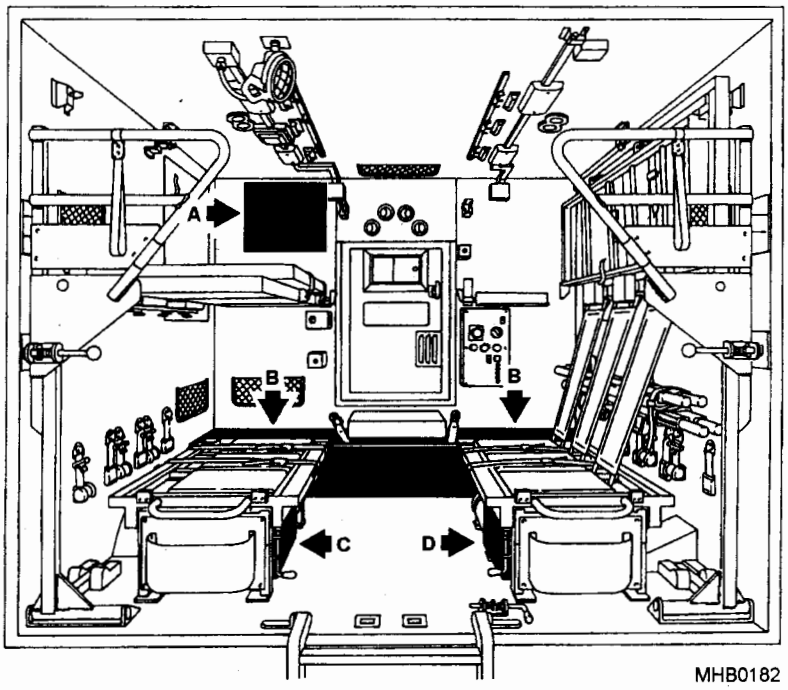

Fig 17 Equipment stowage

Stowage locations

38 The stowage locations (Fig 17) for the equipment are as follows:

38.1 Luton (A).

38.2 General - under and either side of attendants seat (B).

38.3 Left hand side floor locker (C).

38.4 Right hand side floor locker (D).

CHAPTER 2-4

WINTER/WATER

CONTENTS

Para

1 Introduction
2 Vehicle fascia
3 Instrument panel
4 Coolant temperature indicator
5 Fuel level indicator
6 Speedometer
Speedometer trip setting
7 Warning lights panel
Oil pressure warning light
Brake circuit warning light
Turn light arrows
Main beam warning light
Differential lock warning light
Heated rear screen warning light
Trailer warning light
Side lights warning light
Rear fog guard lights warning light
Diesel cold start warning light
Battery charging warning light (FFR only)
8 Six Way main lighting switch
9 Seven way main lighting switch
10 Inspection sockets
11 Auxiliary heater switch
12 Rear screen wash/wipe switch
13 Hazard warning switch
14 Operating the switch
15 Rear fog guard switch
16 Front heated screen switch
17 Heated rear screen switch
18 Headlamp levelling switch
19 Map reading light switch
20 Fuse boxes (WARNING)
21 Main fuse box
22 Main harness fuse box
24 Ammeter

(continued)

CONTENTS (continued)

Fig		Page
1	Coolant temperature indicator	3
2	Fuel level indicator	4
3	Speedometer and trip setting	5
4	Warning lights panel	6
5	Six Way Main lighting switch	9
6	Seven Way Main lighting switch	11
7	Inspection sockets	12
8	Auxiliary heater switch	12
9	Rear wash/wiper switch	13
10	Hazard warning switch	14
11	Rear fog guard light switch	15
12	Front heated screen switch	16
13	Rear heated screen switch	16
14	Headlamp levelling switch	17
15	Map reading light switch	18
16	Main fuse box location	19
17	Main harness fuse box	20
18	Ammeter	21/22

INTRODUCTION

1 This sub-chapter describes the Controls and Instruments applicable to the Truck Utility Light (TUL) HS and Truck Utility Medium (TUM) HS Winter/water vehicles that have not been covered by Sub-Chapter 2-1, 2-2.

VEHICLE FASCIA

2 The vehicle fascia displays the instruments and controls required by the operator when driving the vehicles.

INSTRUMENT PANEL

3 The instrument panel is situated in front of the steering wheel console and consists of the following instruments:

Coolant temperature indicator

4 The coolant temperature gauge (Fig 1) indicates the running temperature of the engine under normal running conditions. The indicator needle should register in the black band but should the needle move to the red band, the vehicle should be stopped and the cause investigated. The design of the indicator ensures that the needle does not fluctuate but there is a delay of a few seconds before registering after the engine has been started or electrical services are switched on.

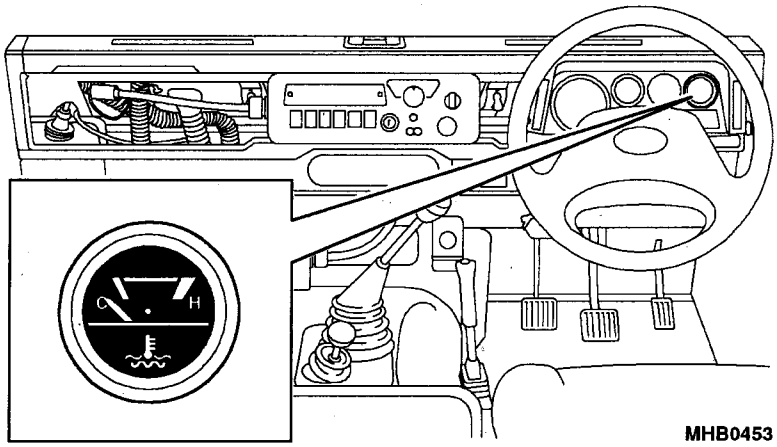

Fig 1 Coolant temperature indicator

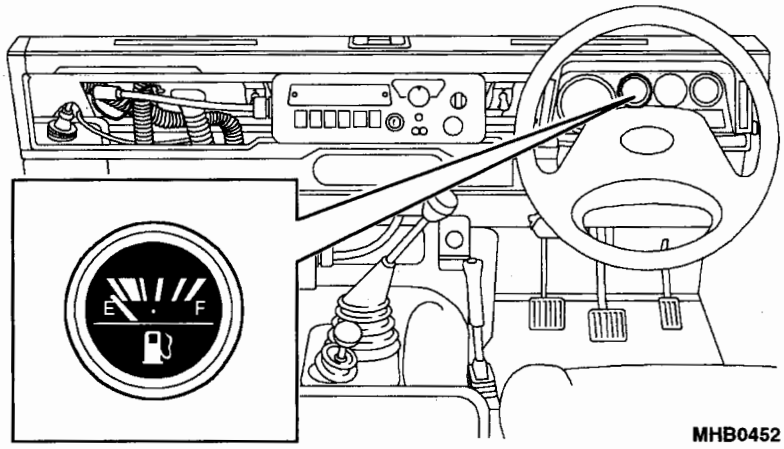

Fig 2 Fuel level indicator

Fuel level indicator

5 The fuel level indicator (Fig 2) shows the approximate contents of the tank. The design of the indicator ensures that the needle does not fluctuate, but there is a time lag of a few seconds before registering after the engine has been started, or after the electrical services have been switched on.

Speedometer

6 The speedometer (Fig 3) indicates the speed of the vehicle in kilometres per hour with a miles per hour subscale. The speedometer incorporates a total distance indicator and a trip distance indicator with a trip reset button (1).

6.1 Speedometer trip setting. The speedometer trip setting allows the indicator to be reset to zero by pushing the small black knob on the front of the speedometer.

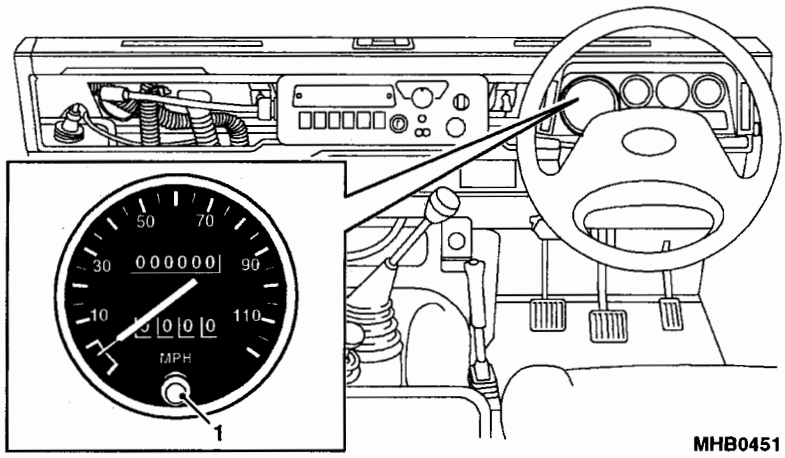

Fig 3 Speedometer and trip setting

WARNING LIGHTS PANEL

7 The warning lights panel (Fig 4 incorporates all the warning symbols and is located in the instrument console.

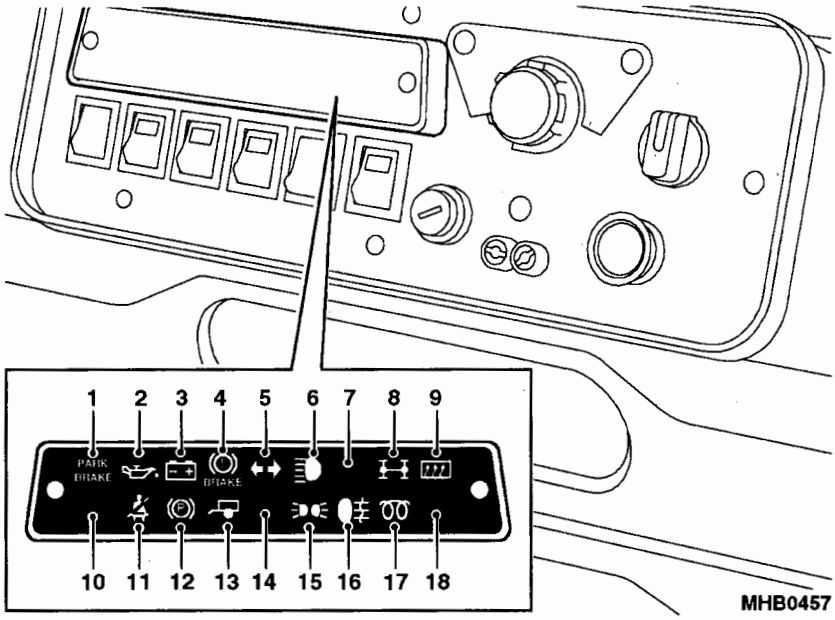

1	Park Brake (not used)	10	Spare
2	Oil pressure	11	Seat belt (not used)
3	Ignition	12	Park brake (not used)
4	Brake circuit	13	Trailer
5	Turn lights	14	Spare
6	Main beam	15	Side lights
7	Low fuel (not used)	16	Rear fog
8	Differential lock	17	Cold start
9	Heated rear screen	18	Battery charging (FFR only)

Fig 4 Warning lights panel

7.1 Oil Pressure warning light. The red oil pressure warning light (2) will illuminate when the ignition is switched on, also when there is abnormality in the oil pressure.

7.2 Ignition warning light. The red ignition warning light (3) will illuminate when the ignition is switched on.

NOTE

The ignition and oil warning lights should be checked when starting the vehicle from cold as they should light up immediately the ignition is switched on and extinguish when the engine is running. The warning lights may flicker when the engine is running at idling speed but provided they fade out as the engine speed increases, the charging rate and oil pressure are satisfactory. If the oil pressure warning light comes on during normal running, the vehicle should be stopped immediately and the cause investigated. The ignition warning light is connected in series with the alternator field circuit. Bulb failure would prevent the alternator charging properly; therefore the bulb should be checked before suspecting an alternator fault. A failed bulb should be changed with the minimum of delay otherwise the vehicle battery will become discharged.

7.3 Brake circuit check warning light. The red brake circuit check warning light (4) will illuminate if there is a fluid leakage, when the ignition is on or the engine is running, from either the front or rear braking system. If leakage occurs the light will illuminate when the brakes are applied. The brake circuit warning light will operate momentarily when the starter is actuated. This will confirm that the warning circuit is functioning correctly. If the light comes on during normal running or braking, the vehicle should be stopped immediately and the cause investigated.

7.4 Turn light arrows. The green turn light arrows (5) flash in conjunction with the turn lights, when operated by the stalk on the steering column. If the turn lights do not operate as described, there may be a bulb failure in the warning light panel or in one of the turn lights.

7.5 Main beam warning light. The blue main beam warning light (6) illuminates when the headlight main beams are operating. The purpose is to remind the operator to dip the headlights when entering brightly lit areas, or when approaching other traffic. The light will also illuminate when the headlight flasher switch is operated.

7.6 Differential lock warning light. The amber differential lock warning light (8) will illuminate when the gearbox differential lock control knob is engaged. The differential lock should be engaged if traction to one or more wheels is likely to be lost. A return to the disengaged position should be made as soon as conditions permit.

7.7 Heated rear screen warning light. The amber heated rear screen warning light (9) will illuminate when the heated rear screen switch is in the "on" position, acting as a reminder to the driver that the switch and heated rear screen are switched "on".

7.8 Trailer warning light. The green trailer warning light (13) illuminates when a trailer is connected to the vehicle via the twelve pin socket. It will flash in conjunction with the vehicle's turn lights, thus ensuring that the trailer turn lights are functioning correctly. In the event of a turn light bulb failure on the trailer, the warning light will flash once only and then remain extinguished. Where a trailer is not used or connected, the trailer warning light momentarily flashes every time the turn light switch is operated.

7.9 Side lights warning light. The green side lights warning light (15) will illuminate when the side lights are switched on.

7.10 Rear fog guard lights warning light. The amber rear fog guard warning light (16) will illuminate when the rear fog guard switch is switched on.

7.11 Diesel-cold start warning light. The amber diesel-cold start warning light (17) will illuminate when the engine starter key is turned to the heater plugs "on" position and will go off as soon as the correct starting temperature has been reached.

7.12 Battery charging warning light (FFR only). The amber battery charging warning light (18) will illuminate when the alternator is not charging the radio batteries. When this occurs stop vehicle and investigate the cause

SIX WAY MAIN LIGHTING SWITCH

8 The six way main lighting switch (Fig 5 (1)) is located in the instrument console and has six positions. Fitted over the top of the switch is an indicator panel plate (2) which shows the individual positions as follows:

8.1	OFF	-	All lights are off
8.2	CONV	-	COnvoy light only
8.3	SCONV	-	Convoy and side lights
8.4	T	-	Tail and rear number plate lights
8.5	ST	-	Side, tail and rear number plate lights
8.6	HST	-	Head, side, tail and rear number plate lights

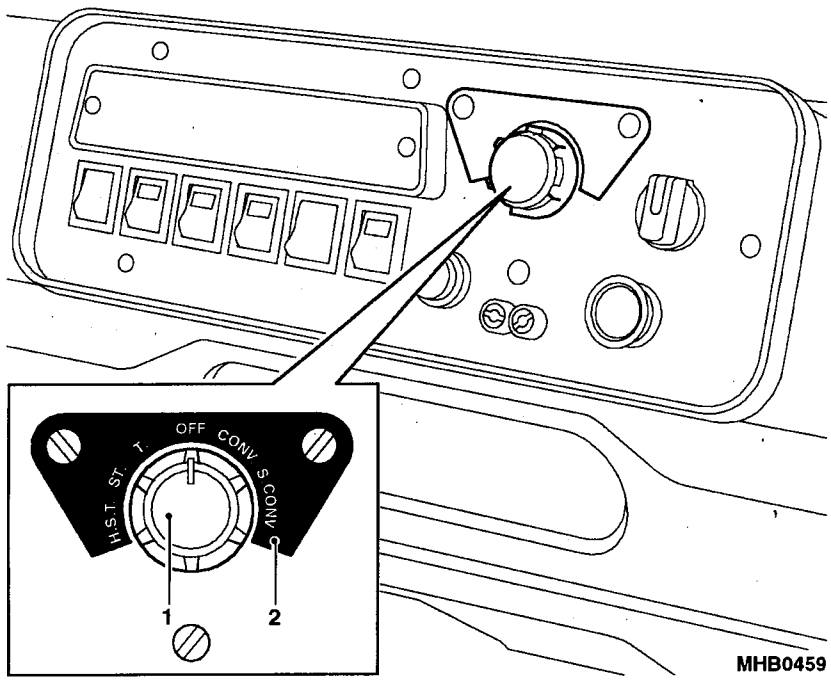

Fig 5 Six Way Main lighting switch

SEVEN WAY MAIN LIGHTING SWITCH

9 The seven way main lighting switch (Fig 6) is situated in the centre of the fascia and has seven positions. For normal working operate the switch in positions "TAG", "1" and "2". To operate the switch in the blackout positions "0", "S1", "S2" and "S3", push the bar (1)) to the left and push the knob inwards (2) and turn. To release the switch from the blackout position, push the knob inwards.

9.1 Position Tag - Direction indicators, hazard warning, headlamp flash, horn normal, stop lamp, reverse lamp, warning lights, map lamp.

9.2 Position "1" - As position Tag plus instruments, side lamps and tail lamps, number. plate lamp.

9.3 Position "2" - As position "1" plus headlamps, headlamp dipped facilities and rear fog lamp.

9.4 Position "0" - All lights off.

9.5 Position "S1" - Blackout stop lamp and convoy light.

9.6 Position "S2" - Blackout rear tail lamps only.

9.7 Position "S3" - Blackout stop lamp, blackout tail lamps, blackout head lamps.

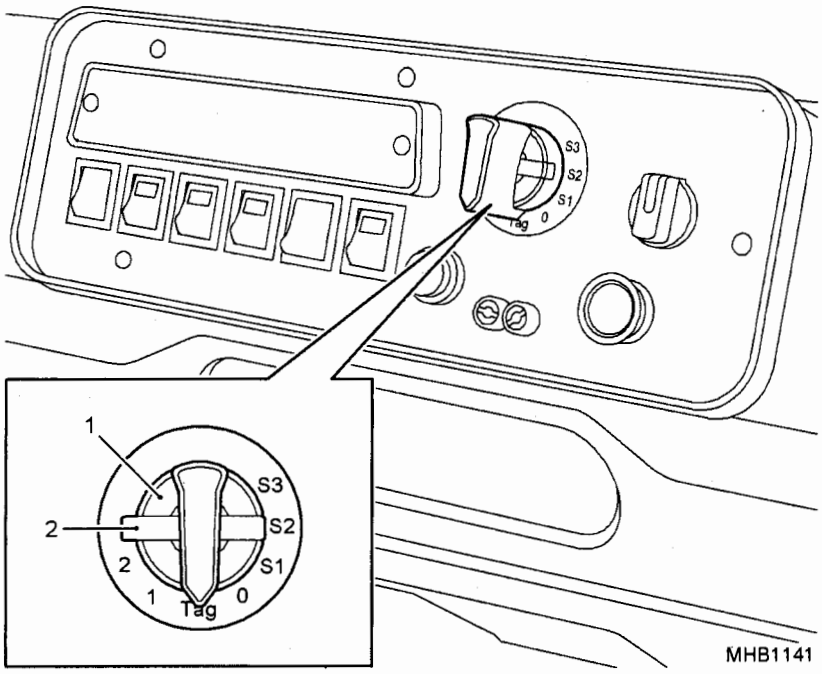

Fig 6 Seven way main lighting switch

INSPECTION SOCKETS

10 The inspection sockets are located in the instrument console and are for the purpose of an inspection lamp. The red socket (Fig 7 (2)) is live and the black socket (1) is to earth.

AUXILIARY HEATER SWITCH

11 The auxiliary heater switch (Fig 8) is located is located in the instrument console and enables the vehicles auxiliary heater to be operated.

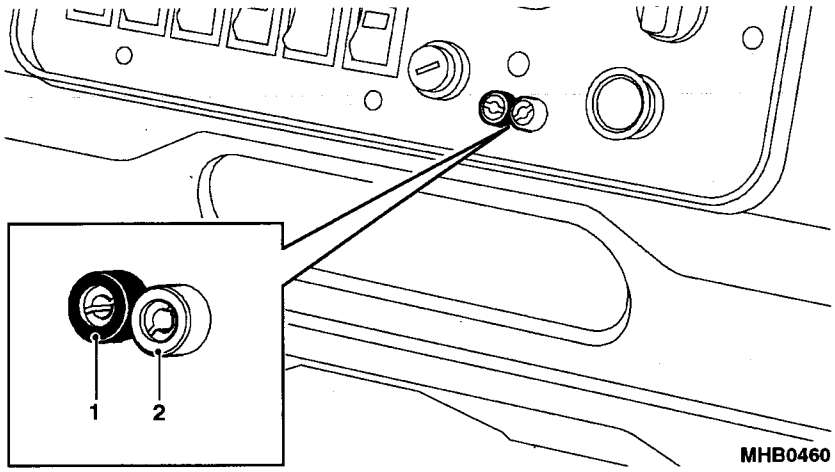

Fig 7 Inspection sockets

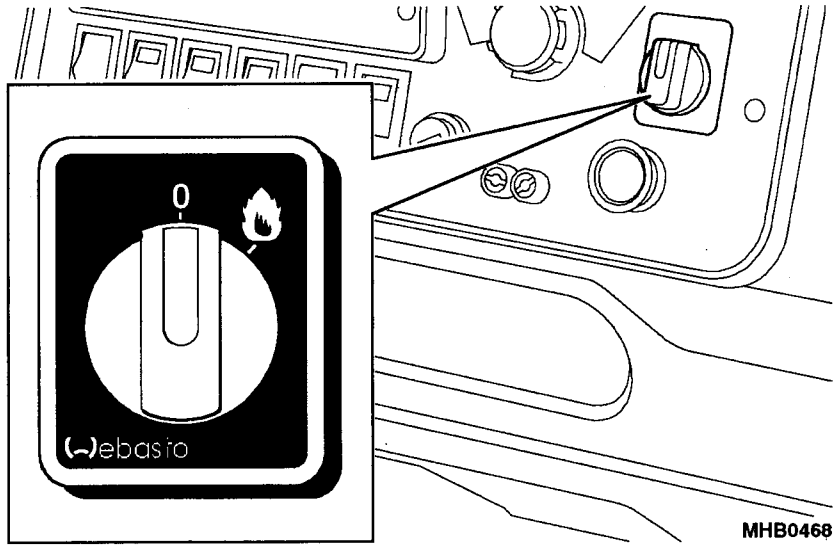

Fig 8 Auxiliary heater switch

REAR SCREEN WASH/WIPE SWITCH

12. The rear screen wash/wipe switch (Fig 9) is located is located in the instrument console and is operated as follows:

12.1 Rotate the switch to the right to activate the rear screen wiper.

12.2 To wash the rear screen, press the spring loaded switch until sufficient water is on the rear screen.

12.3 Release the knob ,and the water will stop. This operation may be carried out with the screen wiper switch in the ""ON"" or "OFF" position.

NOTE

The rear screen wash/wipe switch is only operative with the starter key in the "I" position.

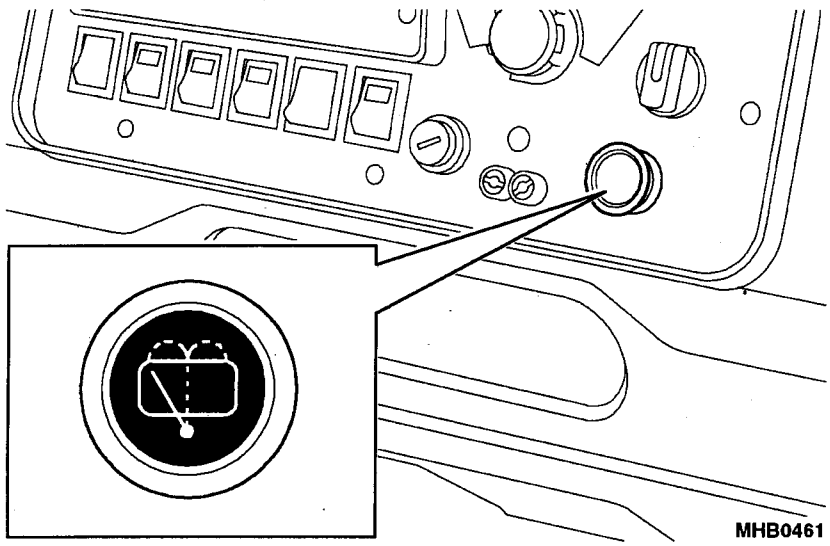

Fig 9 Rear wash/wiper switch

HAZARD WARNING SWITCH

13 The hazard warning switch (Fig 10) is located in the instrument console.

Operating the switch

14 The switch has a two way rocker action which operates in the following manner:

14.1 Press the upper end of the switch in, the hazard lights are off.

14.2 Press the lower end of the switch in, the hazard warning lights are on.

14.3 With the switch on, all four turn lights operate simultaneously. The red warning light (with the triangular symbol) in the switch will flash in conjunction with the exterior turn lights, also the trailer light will flash. The trailer light will also flash even when there is no trailer attached.

14.4 Use the hazard warning system to warn following or oncoming traffic of any hazard, that is, breakdown on fast roads, or an accident to the vehicle or other vehicles.

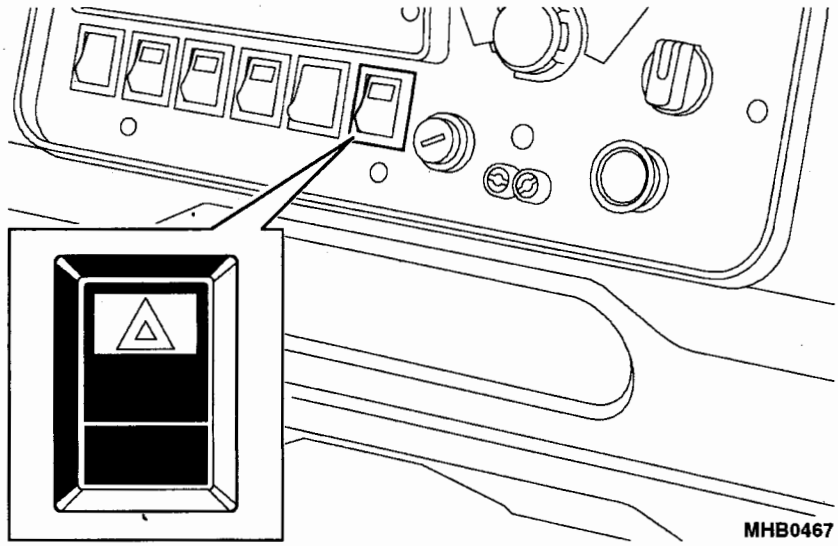

Fig 10 Hazard warning switch

REAR FOG GUARD LIGHT SWITCH

15 The rear fog guard light switch (Fig 11) is located in the instrument console. This is a two-position, on/off rocker switch.

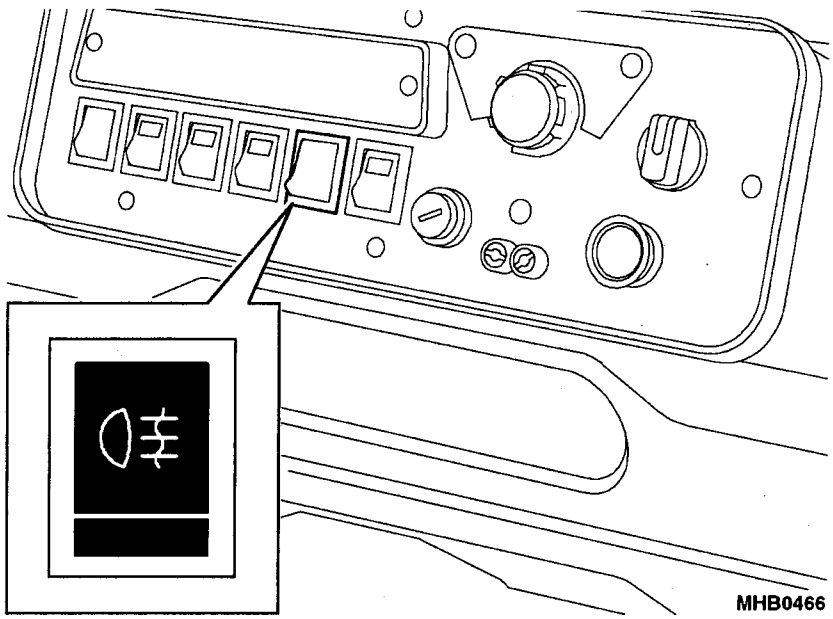

Fig 11 Rear fog guard light switch

FRONT HEATED SCREEN SWITCH

16 The front heated screen switch (Fig 12) is located in the instrument console. The switch has a two way rocker action which operates in the following manner:

16.1 Press the upper end of the switch in, the heated screen is off.

16.2 Press the lower end of the switch in, the heated screen, is on. The heated screen will only be in operation when the engine is running.

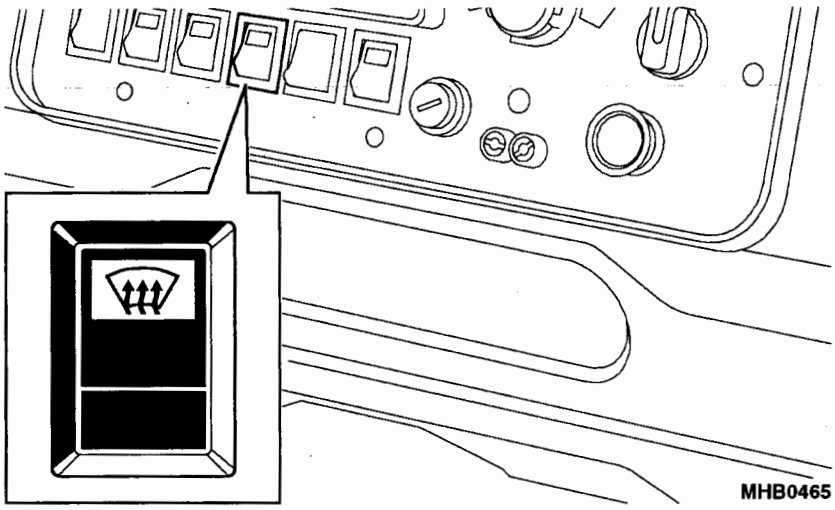

Fig 12 Front heated screen switch

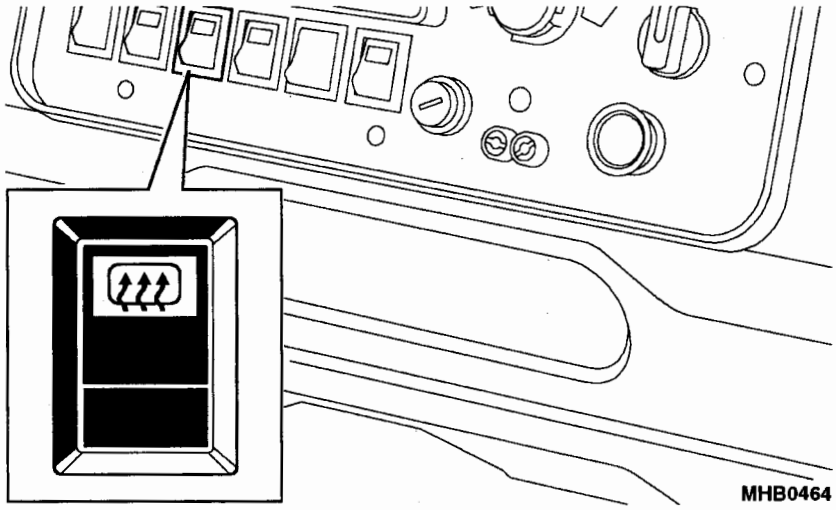

Fig 13 Rear heated screen switch

HEATED REAR SCREEN SWITCH

17 The heated rear screen switch (Fig 13) is located in the instrument console. The switch has a two way rocker action which operates in the following manner:

17.1 Press the upper end of the switch in, the heated rear screen is off.

17.2 Press the lower end of the switch in, the heated rear screen, is on. The heated rear screen will only be in operation when the starter key is in the "II" position also the warning light will illuminate to inform the user.

HEADLAMP LEVELLING

18 The headlamp levelling switch (Fig 14) is located in the instrument console. The levelling switch is a two-position rocker switch for laden and un-laden operations of the vehicle and operates as follows:

18.1 Press the upper end of the switch in for an unladen vehicle.

18.2 Press the lower end of the switch in when the vehicle is fully loaded.

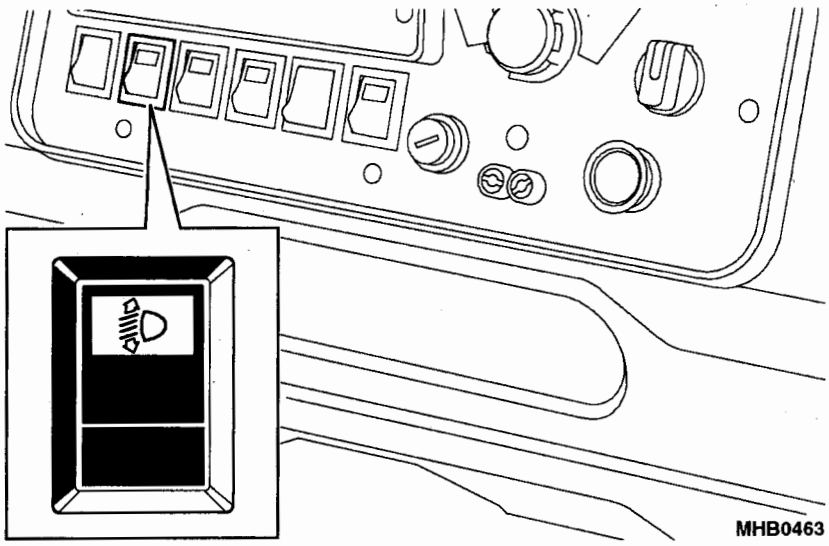

Fig 14 Headlamp levelling switch

MAP READING LIGHT SWITCH

19 The map reading light switch (Fig 15) is located in the instrument console. The rocker switch operates the map reading light.

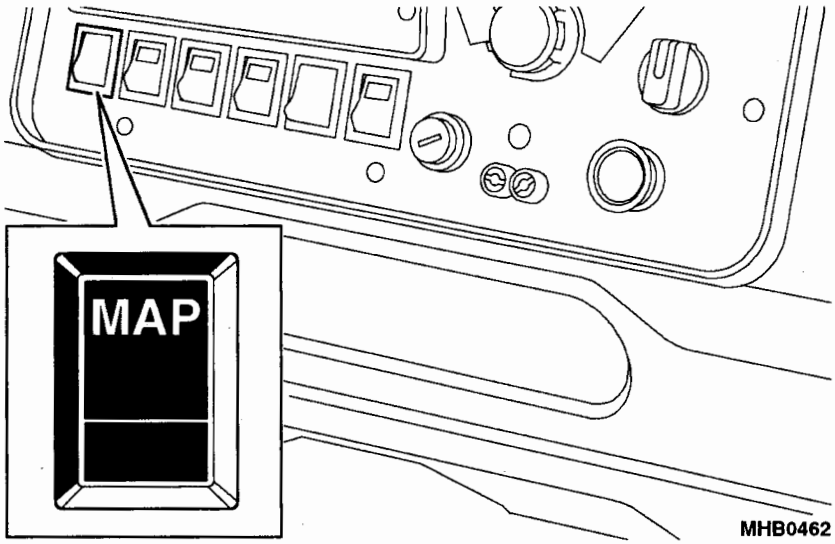

Fig 15 Map reading light switch

FUSE BOXES

WARNING

MAIN HARNESS FUSE BOX. THIS CONTAINS FUSES THAT PROTECT THE VEHICLE MAIN HARNESSES. SHOULD ANY OF THESE FUSES FAIL THE VEHICLE MUST BE TAKEN TO THE WORKSHOP AND THE FAULT RECTIFIED IMMEDIATELY.

20 There are two fuse boxes, the main fuse box and the main harness fuse box.

Main fuse box

21 The main fuse box (Fig 16) is located inside the vehicle to the left of the instrument panel. It contains twenty fuses of the following values: 3; 5; 7.5; 10; 15 and 20 amperes.

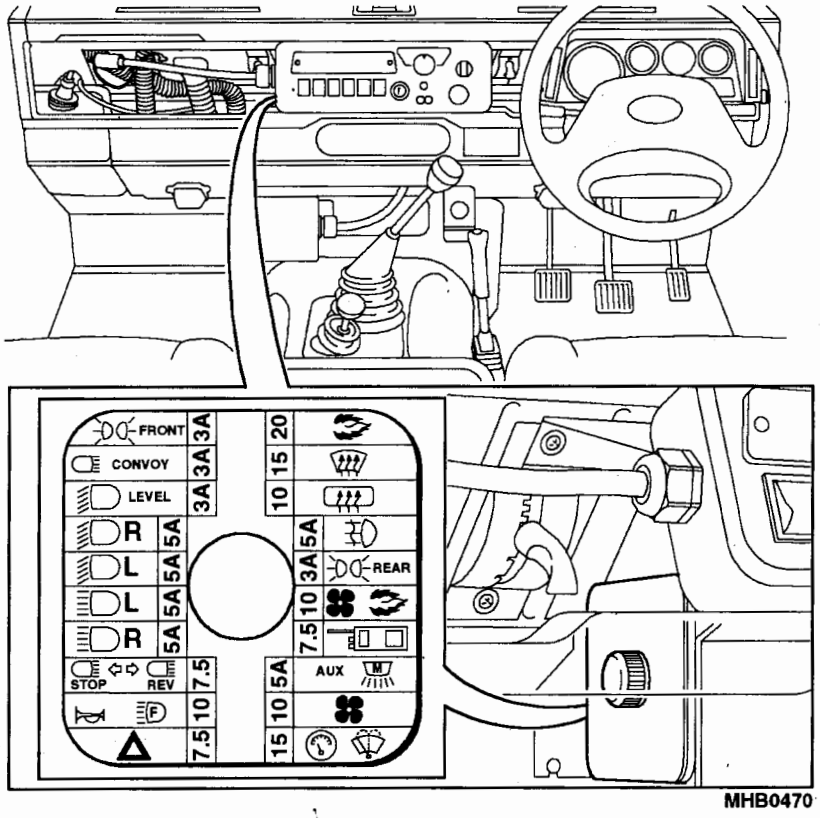

Fig 16 Main fuse box location

Main harness fuse box

22 The main harness fuse box (Fig 17) located below the fascia adjacent to the main gear change lever and contains 4 fuses of the following values: 20, 30 and 40 amperes.

23 Only spade type fuses of the correct rating should be used as replacements. The location and the items protected by the fuses are shown in the chart attached to the inside of the fuse box cover.

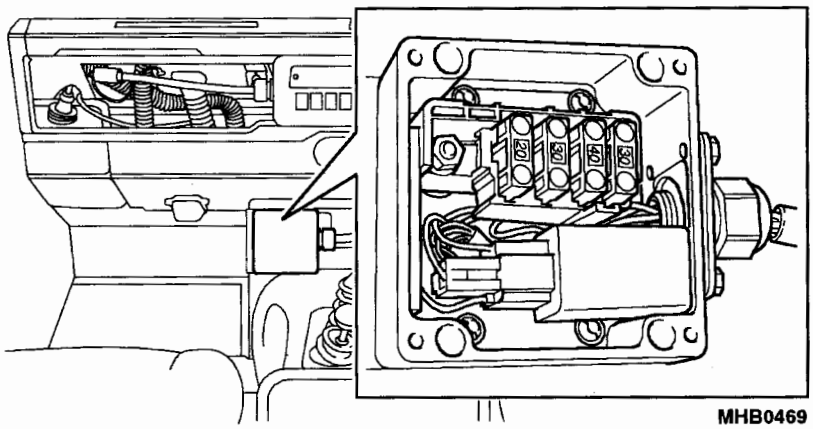

Fig 17 Main harness fuse box location

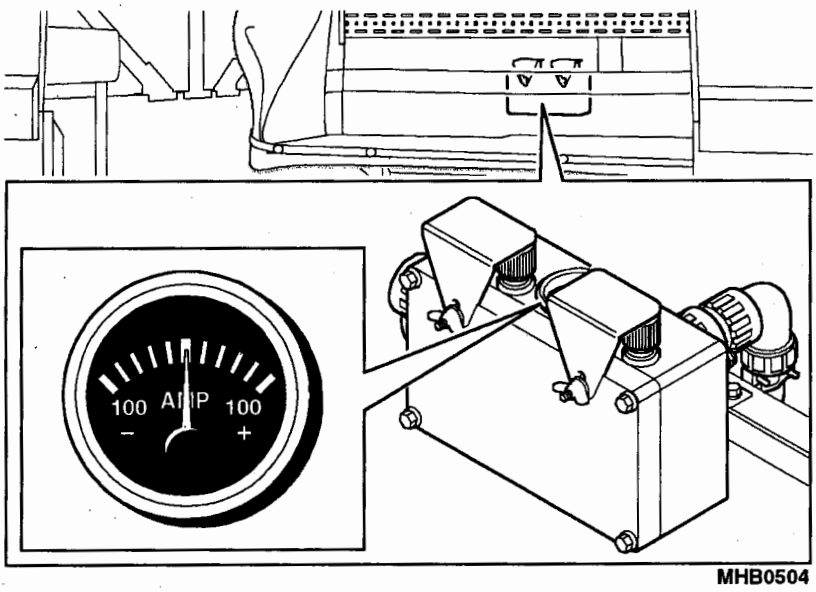

Fig 18 Ammeter

AMMETER

24 The ammeter (Fig 18) is located in the terminal box, mounted on the rear bulkhead, and graduated to indicate the charge and discharge of the radio system batteries.

CHAPTER 2-5

WINTERISED

CONTENTS

Para

1 Introduction
2 General

INTRODUCTION

1 This sub-chapter describes all the items applicable to Truck Utility Light (TUL) HS and Truck Utility Medium (TUM) HS Winterised vehicles which are not covered in the previous chapters.

General

2 All information appertaining to the winterised vehicles can be found in sub-chapter 2-4 Winter/Water.

CHAPTER 2-6

AIR DROP

CONTENTS

Para

1 Introduction
2 General

INTRODUCTION

1 This sub-chapter describes all the items applicable to Truck Utility Light (TUL) HS Air drop vehicles which are not covered in the previous chapters.

General

2 All information appertaining to the air drop vehicles can be found in sub-chapter 1-1 Basic vehicle and 1-2 Fitted for Radio (FFR).

CHAPTER 2-7

HELICOPTER SUPPORT PLATFORM

CONTENTS

Para

1 Introduction
2 General

INTRODUCTION

1 This sub-chapter describes all the items applicable to the Truck Utility Medium (TUM) HS Helicopter Support Platform vehicles which are not covered in the previous chapters.

General

2 All information appertaining to the Helicopter support platform vehicles can be found in sub-chapter 2-1 Basic vehicle and 2-2 Fitted For Radio (FFR).

CHAPTER 2-8

COMMANDERS IK

CONTENTS

Para

Para

1 Introduction
2 Bench seats
5 Sockets panel
6 Interior light switch
7 Residual Current Device (RCD)
8 Battery charger
9 Converter

Fig Page

1 Bench seats 2
2 Socket panel 3
3 Interior light switch 3
4 Residual Current Device (RCD) 4
5 Mounting bracket assembly 5/6

INTRODUCTION

1 This sub-chapter describes all the items applicable to the Truck Utility Medium (TUM) HS Commanders IK vehicles which are not covered in the previous chapters.

BENCH SEATS

2 There are two (2 seater) bench type seats located in the rear of the vehicle.

3 The seat cushions (Fig 1 (1)) can be stowed in an upright positions by means of a strap with a metal hook (2) which fastens to the side of the seat.

4 To use the seat, release the retaining hook and move the cushion into the horizontal position.

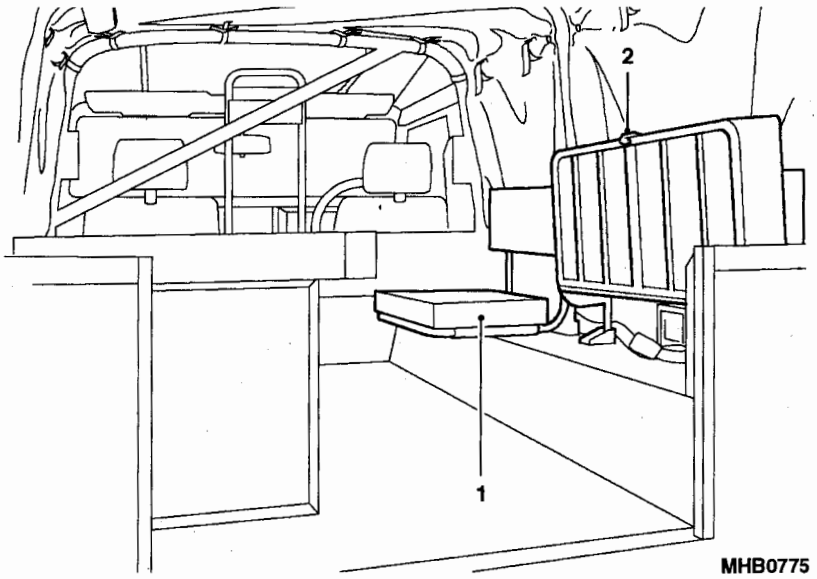

1 Bench seat 2 Retaining strap

Fig 1 Bench seats

SOCKETS PANEL

5 The sockets panel (Fig 2) is located at the rear of the vehicle on the left hand side adjacent to the door. It has a cover which is kept in place by a velcro strip. The panel has two pairs of sockets, one pair of standard 240v sockets (1) and one pair of 220v sockets (3). On the panel is also a 12v outlet (2).

INTERIOR LIGHT SWITCH

6 The light switch (Fig 3) is located in the centre of the terminal box mounted on the rear bulkhead. To turn the two interior lights on and off, press the switch (1) as appropriate.

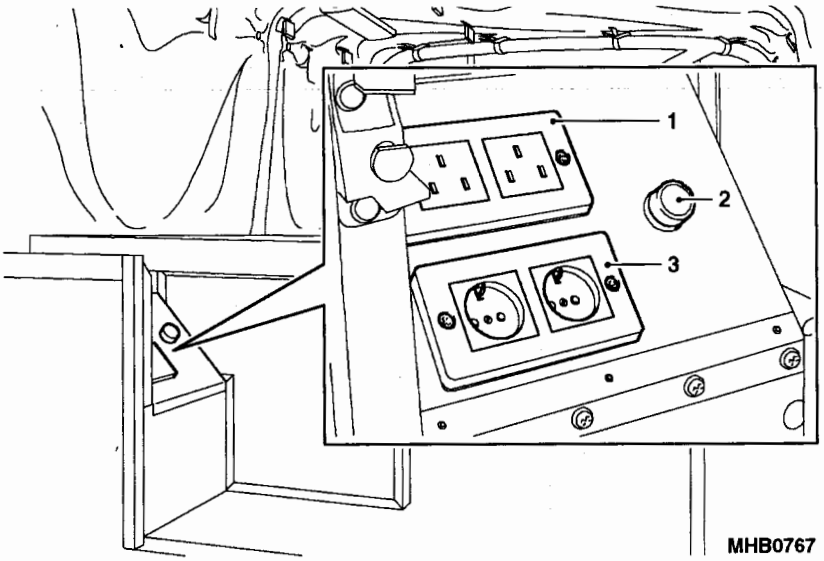

Fig 2 Socket panel

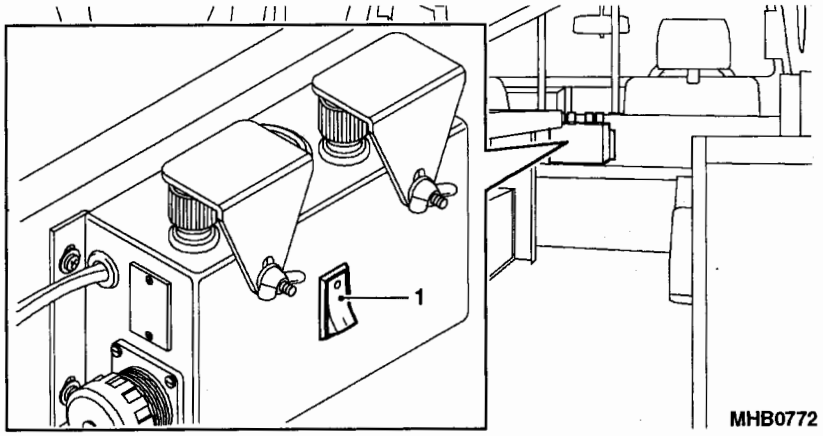

Fig 3 Interior light switch

RESIDUAL CURRENT DEVICE (RCD)

7 The RCD (Fig 4) is located at the rear of the vehicle on the right hand side. The purpose of the RCD is to measure the current on either side of the device. If the current is found to be unstable, it will isolate the circuit by means of circuit breakers.

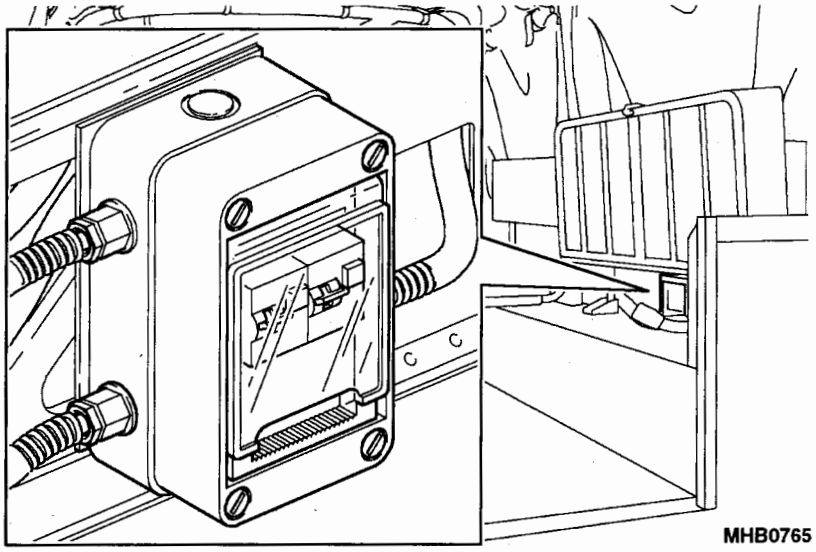

Fig 4 Residual Current Device (RCD)

BATTERY CHARGER

8 The battery charger (Fig 5 (1)) is located in the rear of the vehicle to the left hand side. It is positioned in the mounting bracket assembly adjacent to the converter. This ensures that the two batteries remain charged while the vehicle engine is switched off. This then does not put a strain on the vehicle systems when being used.

CONVERTER

9 The converter is situated on the same bracket assembly as the charger and is adjacent to it. This changes the generated current from a 24v supply to a 12v supply to enable the 12v socket mounted on the socket panel to be used.

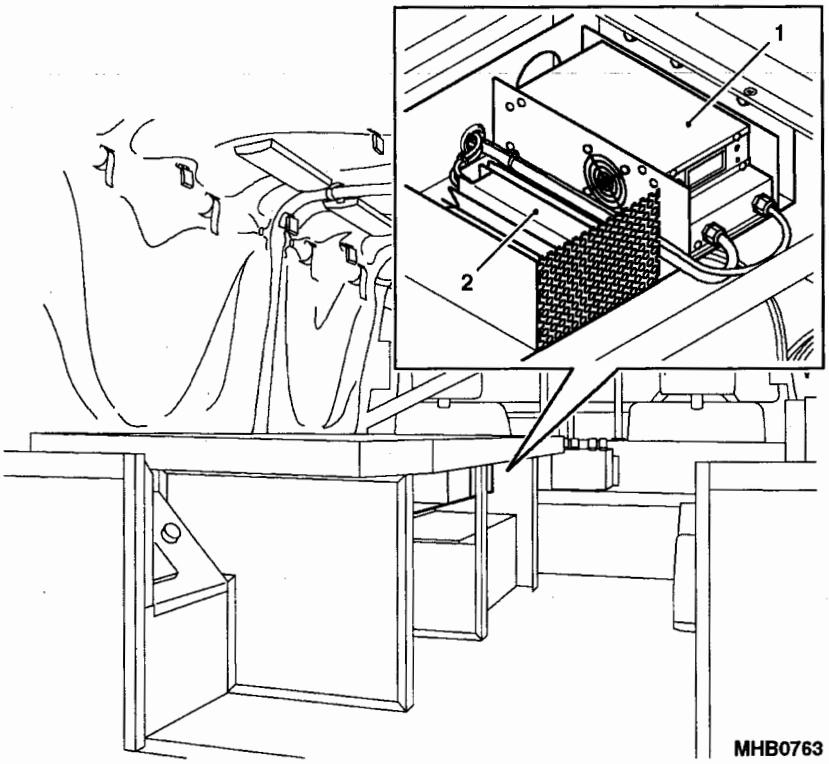

Fig 5 Mounting bracket assembly

CHAPTER 2-9

WEAPONS MOUNTED INSTALLATION KIT (RWMIK)

CONTENTS

Para

1 Introduction
2 Height adjustable seat (WARNING)
To raise the seat
To lower the seat
3 Passenger seat belt extension
4 Gunners folding seat
5 Gunners seat belt
6 Canopy side doors
7 Rear door/pannier
8 Stowage
9 Bowman mounting brackets
10 Sand channels
11 Shower proof dash cover
12 Shower proof drivers and passenger seat covers
13 Jerry can storage
14 Air locker system
15 Power outlet switched socket - 12 volt (CAUTION)
16 Power outlet socket - 24 volt (CAUTION)
17 FFR battery storage
18 Raised air intake

Fig		Page
1	Height adjustable seat	3
2	Gunners folding seat	5
3	Gunners seat belt	6
4	Canopy side doors	8
5	Rear door/pannier operation	9
6	Rear door/pannier stowage	11
7	Stowage	12
8	HMG barrel clamps	12
9	Bowman mounting brackets	13
10	Sand channels	14
11	Shower proof dash cover	15
12	Jerry can stowage	16

13	Air locker control switches	17
14	Power outlet switched socket - 12 volt	18
15	Power outlet socket - 12 volt	19
16	FFR battery storage	20
17	Raised air intake	21/22

INTRODUCTION

1 This sub-chapter describes all the items applicable to the Truck Utility Medium (TUM) HS Weapons Mounted installation Kit (RWMIK) vehicles, which are not covered in the previous chapters.

HEIGHT ADJUSTABLE SEAT

2 The height adjustable seat (Fig 1) is provided to give better access to the crew protection weapon.

2.1 To raise the seat. Pull the operating lever fully upwards while lifting body weight from the seat. The seat will rise automatically.

WARNING

DO NOT USE THE SEAT IN RAISED POSITION WHEN THE VEHICLE IS MOVING.

2.2 To lower the seat. Pull the operating lever fully upwards while remaining seated, the seat will fall slowly but can be stopped at any point by releasing the operating lever

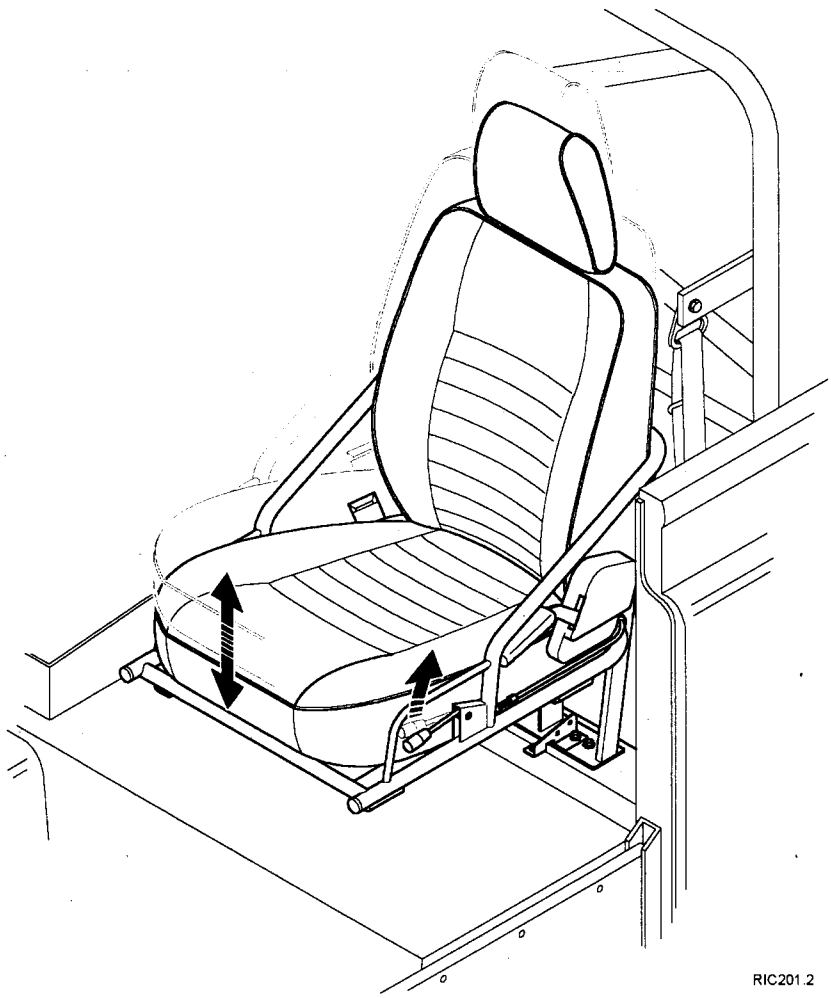

Fig 1 Height adjustable seat

PASSENGER SEAT BELT EXTENSION

NOTE

Seat belt extension only to be used when the normal vehicle belt length is insufficient.

3 When operating the passengers seat belt extension always ensure that the following points are observed:

3.1 To install, clip the buckle end of seat belt extension on to existing seatbelt.

3.2 Fasten seat belt in the normal way (refer to Chap 2-1 para 13).

3.3 To remove, press the release button and disengage the seat belt extension.

3.4 When not in use the seat belt extension should be stored with the vehicle.

GUNNERS FOLDING SEAT

4. The gunners folding seat (Fig 2) is provided in the gunners position at the rear of the vehicle.

4.1 To unfold the seat. Push the seat base downwards, the seat folds down and out.

4.2 To fold the seat. Pull the seat base upwards, the seat folds up and back.

4.3 To access the area behind the seat lift the knob (3) and fold the seat back towards the rear of the vehicle.

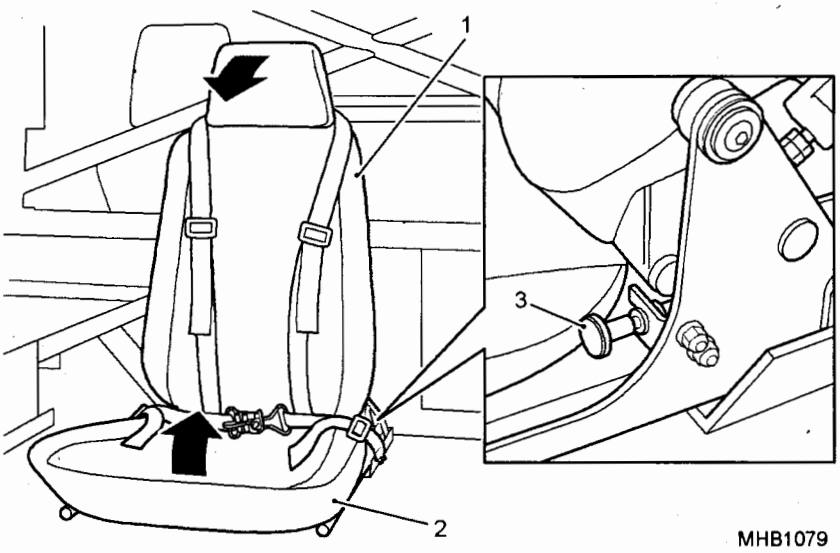

Fig 2 Gunners folding seat

GUNNERS SEAT BELT

5 When operating the gunners seat belt always ensure that the following points are observed:

5.1 Ensure that the belt is lying flat and is not twisted either on the wearer's body or between the wearer and the anchorage point.

5.2 Never attempt to use the seat belt for more than one person.

5.3 To fasten draw the belts (Fig 3 (1)) over the shoulders and across the hips.

5.4 Fasten the buckle (2).

5.5 Pull the belts through the adjusters (3) until the belts are tight

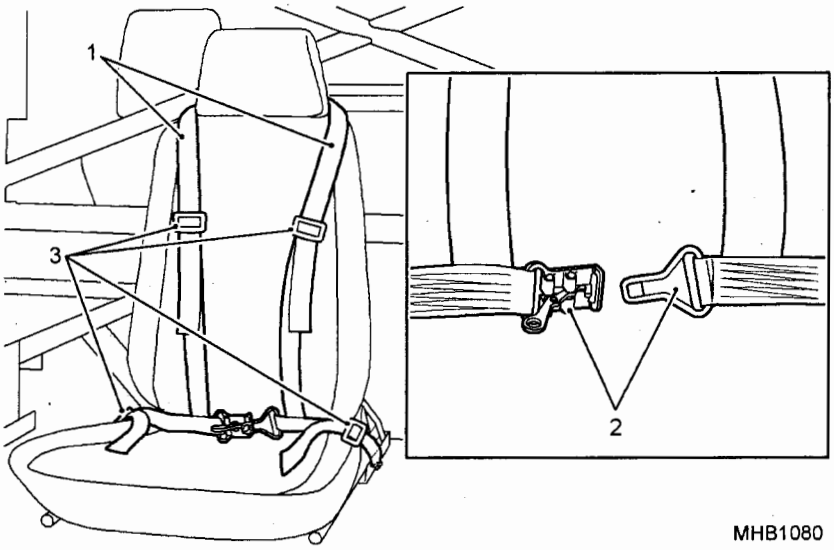

Fig 3 Gunners seat belt

CANOPY SIDE DOORS

6 The canopy has two side doors, which can be rolled back to facilitate access to the vehicle (Fig 4). To open and secure the doors.

6.1 Unzip the door and window from the main canopy.

6.2 Roll the door and window (1) towards the front of the vehicle.

6.3 Wrap the straps (2) around the door or window feed through eyes on the side of vehicle or windscreen and fasten using straps attached to the door/window.

REAR DOOR/PANNIER

7 The rear door (Fig 5) serves two purposes, for access into the rear of the vehicle and the other as a stowage facility. To open the rear door/pannier.

7.1 Pull the handle (4) on the left hand side of the door.

7.2 Open door and swing round into position and engage the locking mechanism (2) on the rear of the vehicle with the catch (3) on the pannier.

7.3 To close the door, release the locking mechanism (2) and swing door around to closed position.

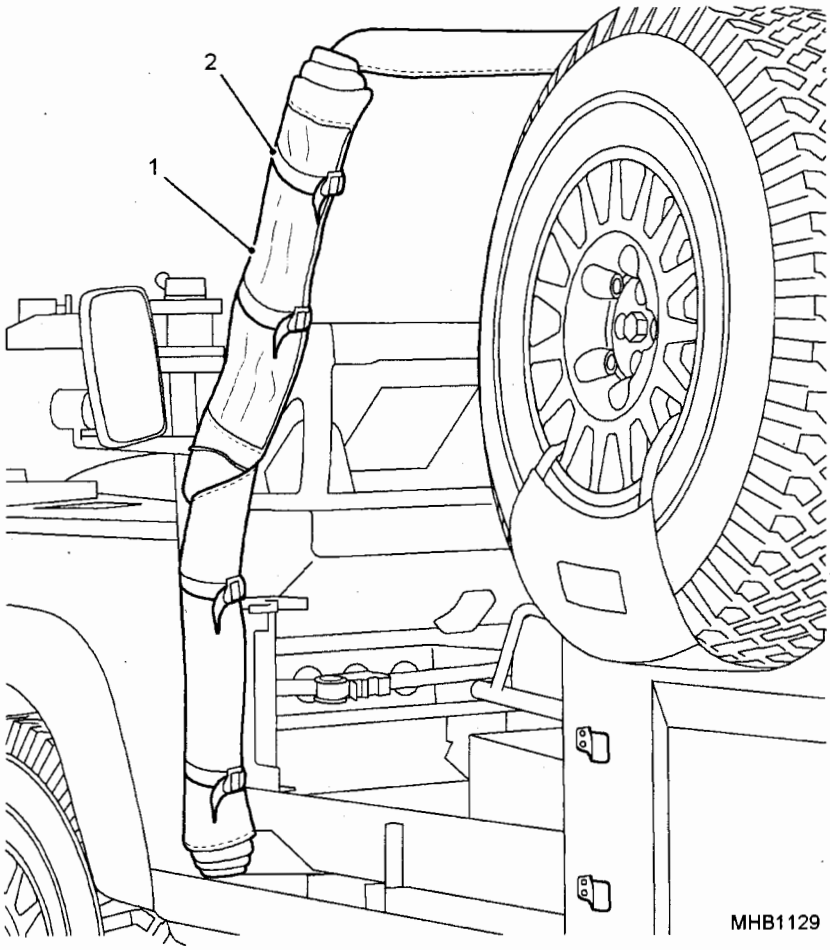

Fig 4 Canopy side doors

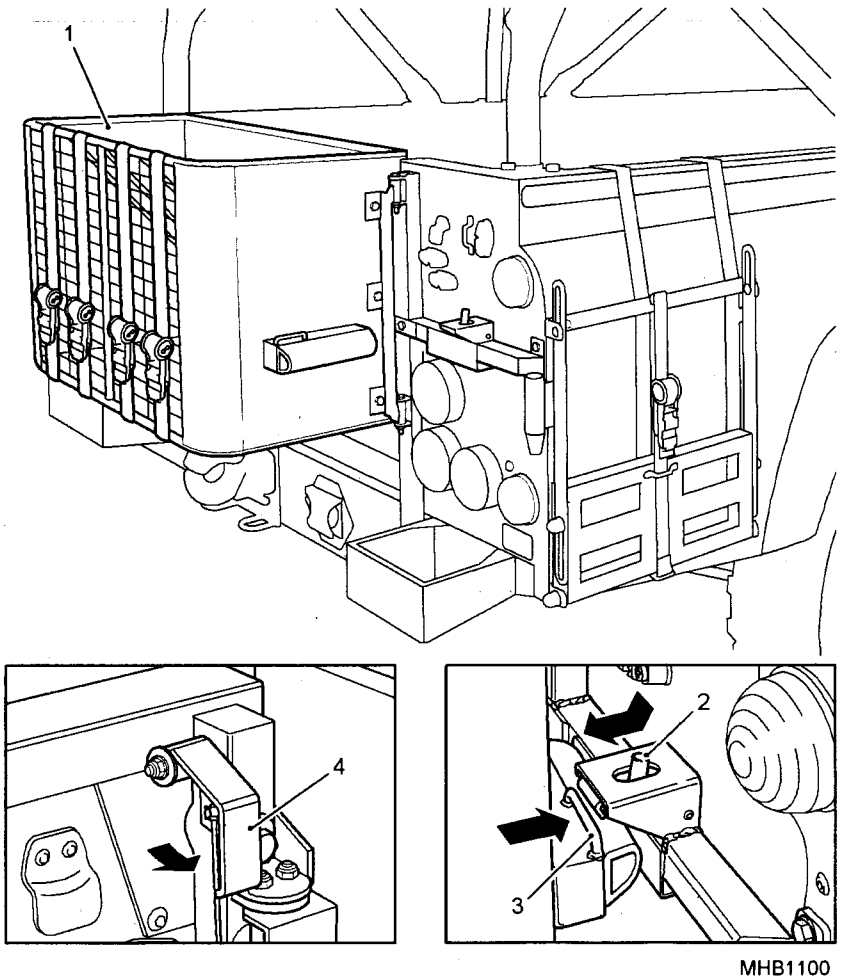

Fig 5 Rear door/pannier operation

STOWAGE

8 There are several places (Fig 7) on the vehicle, which are for stowage of various equipment.

8.1 Located on the bonnet is the cam net stowage.

8.2 There is provision for two HMG barrels (Fig 8) to be stowed at the front of the roll cage. A barrel clamp adaptor provides alternative stowage for two GPMG barrels when required.

8.3 On the floor at the rear of the vehicle are lashing eyes for stowing weapons.

8.4 On the left hand side there are lashing eyes for a tripod.

8.5 On the right hand side of the roll cage there are two brackets for stowing an SA80 weapon for the rear crewman

8.6 On the side of the transmission tunnel there is a tray for a single H84 ammo tray.

8.7 In the commanders foot well there is an ammo tray

8.8 On the commanders left hand side there is an upright 7.62mm barrel clamp.

8.9 The rear pannier (Fig 6 (1)) is for H84 containers.

8.10 There are two areas where AGL trays (Fig 7 (1,3)) are located in the rear of the vehicle.

8.11 There are folding supports for jerry can stowage (refer Figs 10 and 12).

8.12 There are three Bergan straps mounted on the roll cage on the side of the vehicle. One strap on the side of the spare wheel and two on the other side of the vehicle.

8.13 There is an AGL support strap attached to eyebolts on the support frame at the rear of the vehicle.

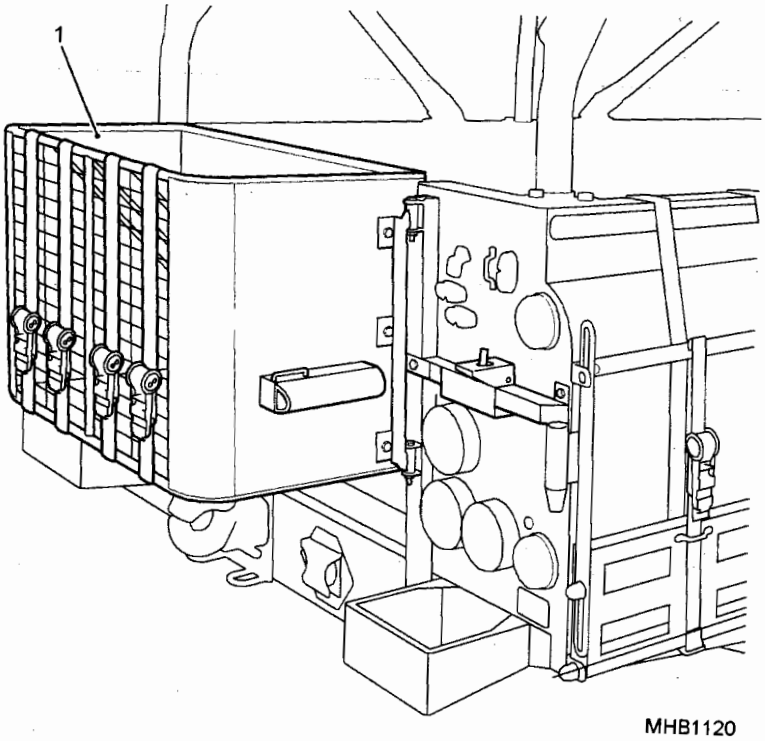

Fig 6 Rear door/pannier stowage

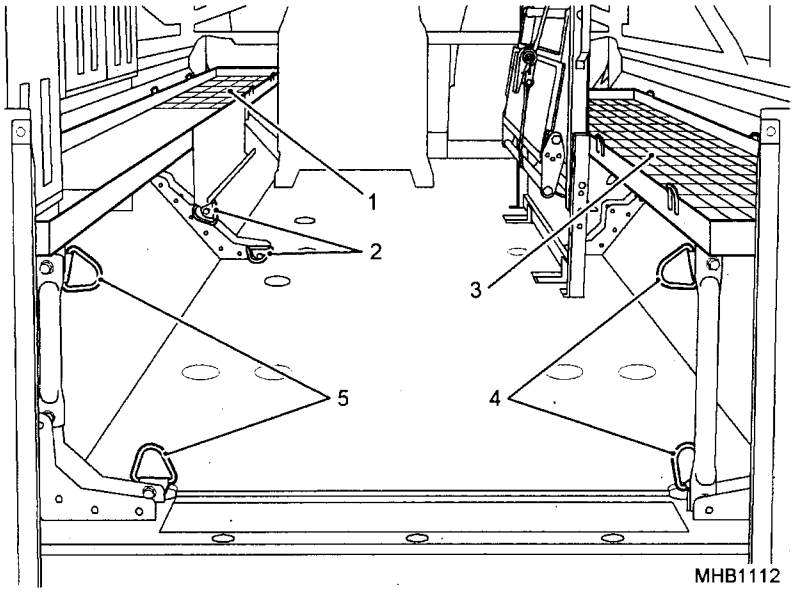

Fig 7 Stowage

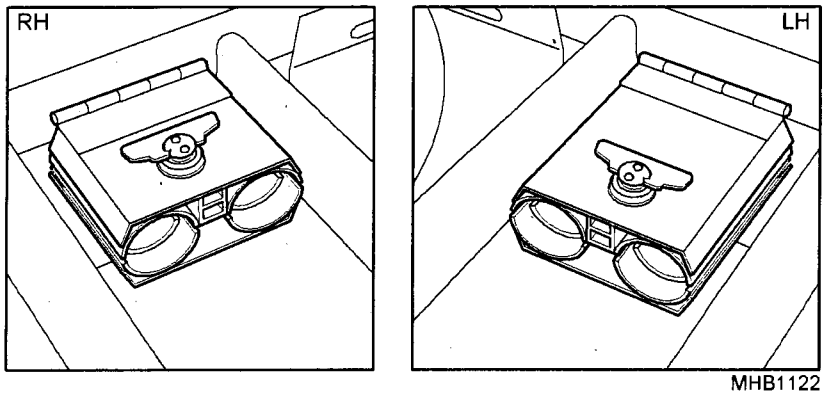

Fig 8 HMG Barrel clamps

[redacted]

SAND CHANNELS

10 Sand channels are provided to assist in the recovery of the vehicle in arduous conditions. The sand channels rest on brackets and are secured with a ratchet and strap (Fig 10).

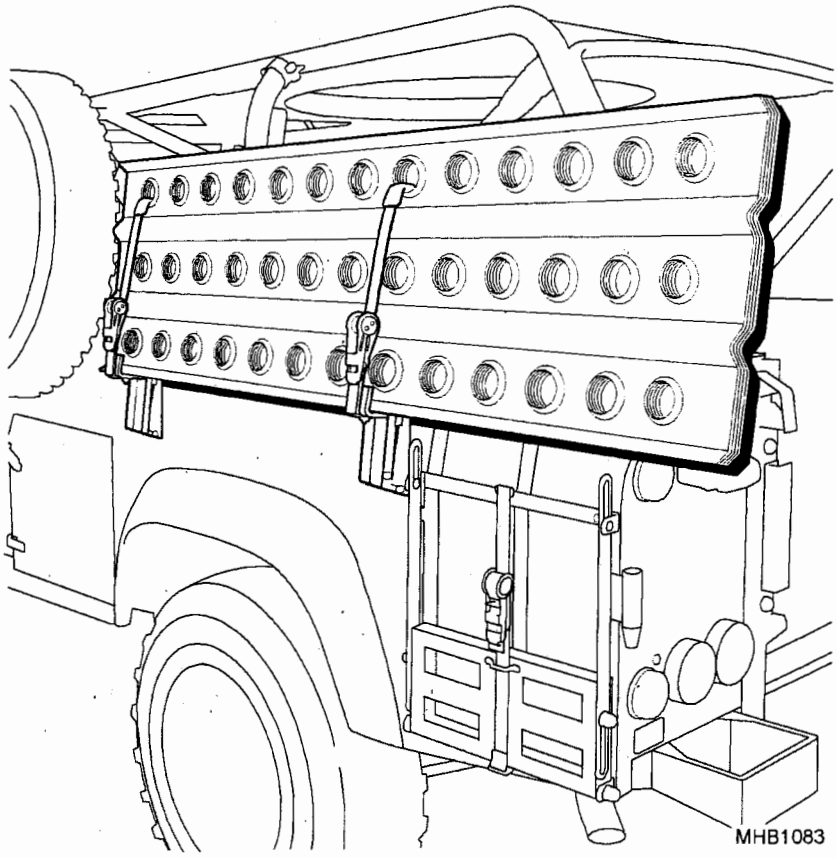

Fig 10 Sand Channels

SHOWER PROOF DASH COVER

11 A shower proof dash cover is provided for the protection of the dashboard during adverse weather conditions (Fig 11). The cover is attached to the dashboard by straps secured to the bulkhead.

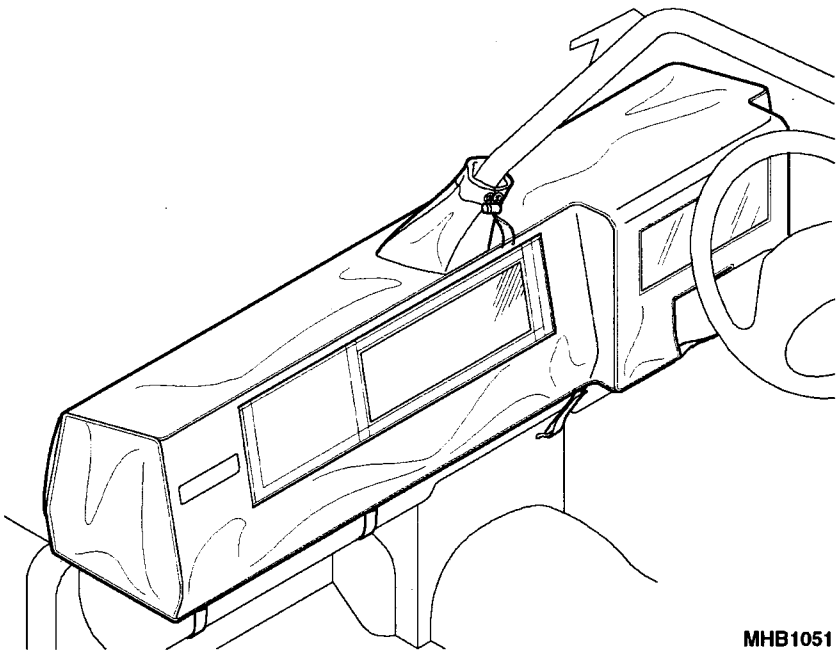

Fig 11 Shower proof dash cover

SHOWER PROOF DRIVERS AND PASSENGER SEAT COVERS

12 Shower proof drivers and passenger seat covers are provided for the protection of the seats during adverse weather conditions.

JERRY CAN STOWAGE

13 There is provision for the stowage of 2 jerry cans. One mounted on each side of the vehicle (Fig 12) on jerry can stowage frames.

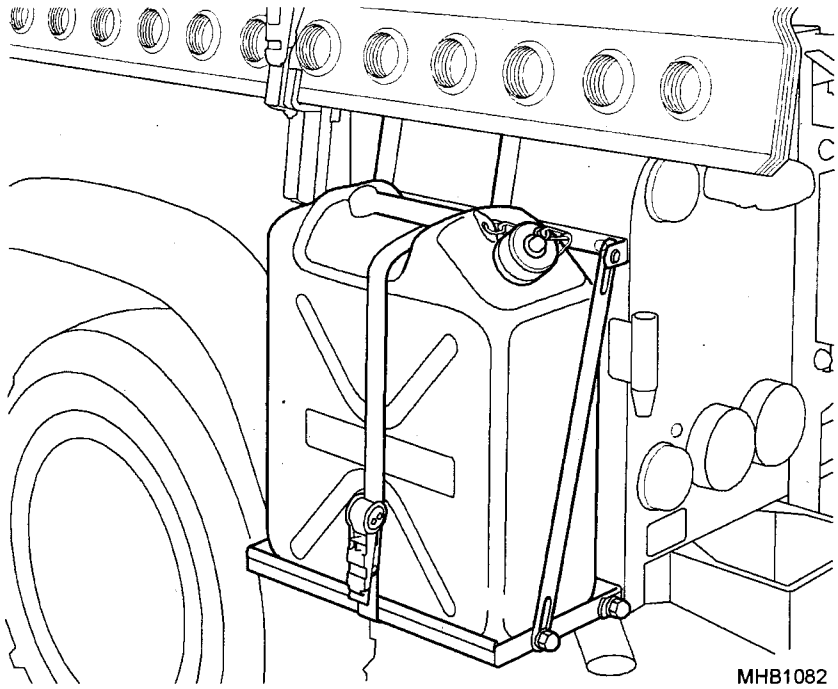

Fig 12 Jerry can stowage

AIR LOCKER SYSTEM

14 The Air Locker System is controlled by three illuminated switches on the dashboard (Fig 13) as follows:

14.1 The Compressor switch (3) controls the air compressor.

14.2 The front Air Locker switch (1) locks the front differential.

14.3 The Rear Air Locker switch (2) locks the rear differential.

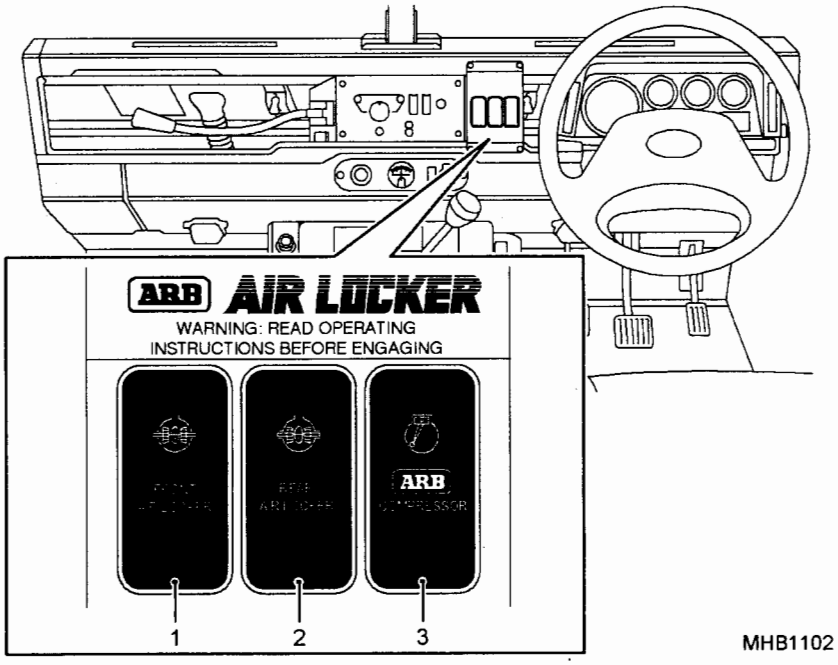

Fig 13 Air locker control switches

POWER OUTLET SWITCHED SOCKET - 12 VOLT

15 The 12 volt power outlet socket (Fig 14 (1)) is located on the vehicle dash. It provides a 12V output via a DIN type socket controlled by a rocker switch (2), with power supplied from a DC/DC converter mounted behind the vehicle dash. The supply is fitted with an inline fuse.

NOTE

The 12 volt socket should be switched off when not in use as the DC/DC converter has a low current draw, which could result in a discharged battery over a period of time.

CAUTION

Use of power output socket without the vehicle engine running could result in a discharged battery.

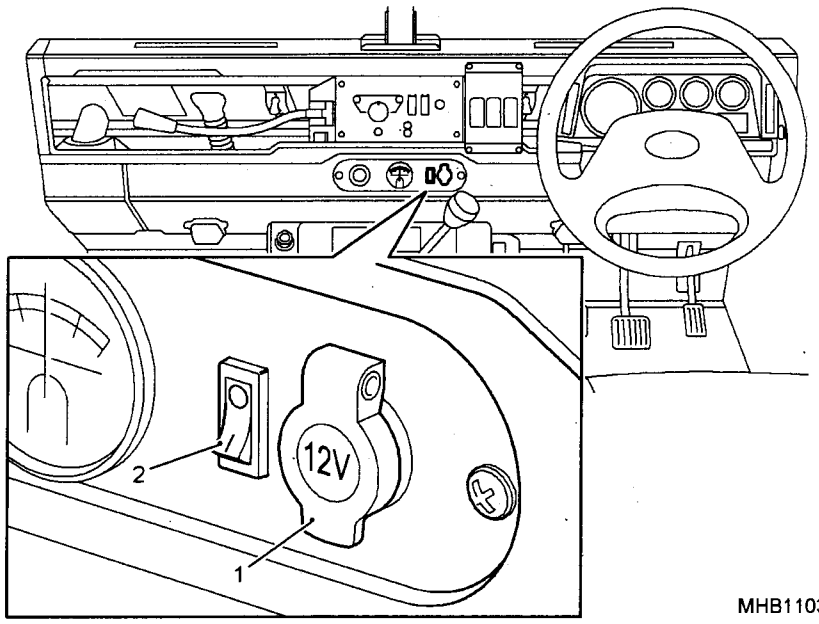

Fig 14 Power outlet switched socket - 12 volt

POWER OUTLET SOCKET - 24 VOLT

16 The 24 volt power outlet socket (Fig 15 (1)) is located on the vehicle dash. It provides a 24 volt output via a cigar type socket. The supply is fitted with an inline fuse.

CAUTION

Use of the power output socket without the vehicle engine running could result in a discharged battery.

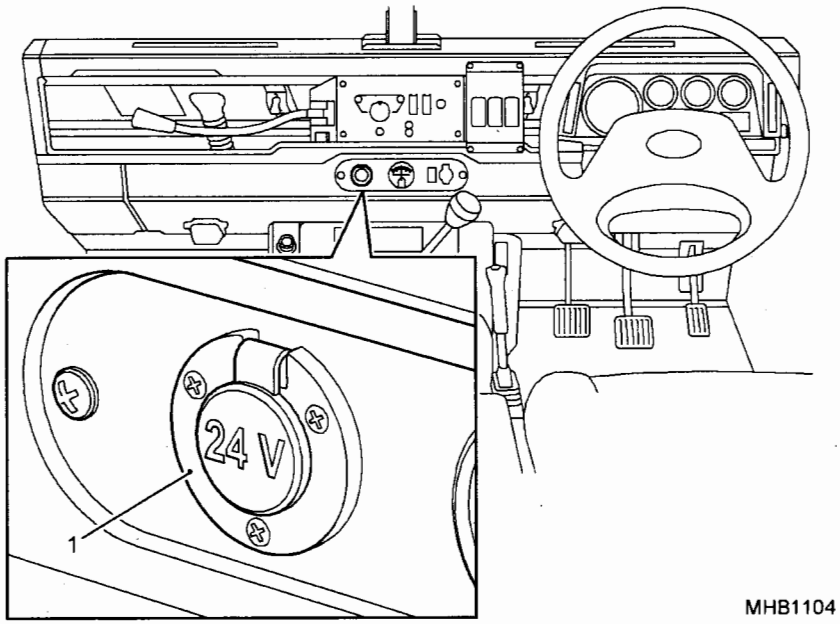

Fig 15 Power outlet socket - 24 volt

FFR BATTERY STORAGE

17 The FFR batteries are located underneath the right hand seat (Fig 16). To obtain access to the FFR battery compartment proceed as follows:

17.1 Lift off the seat cushion (1).

17.2 Undo the over centre catch (2) and remove the cover plate (3) from the seat base.

17.3 The FFR batteries are now accessible.

17.4 Slide the cover back into place and secure using the over centre catch.

17.5 Replace the seat cushion.

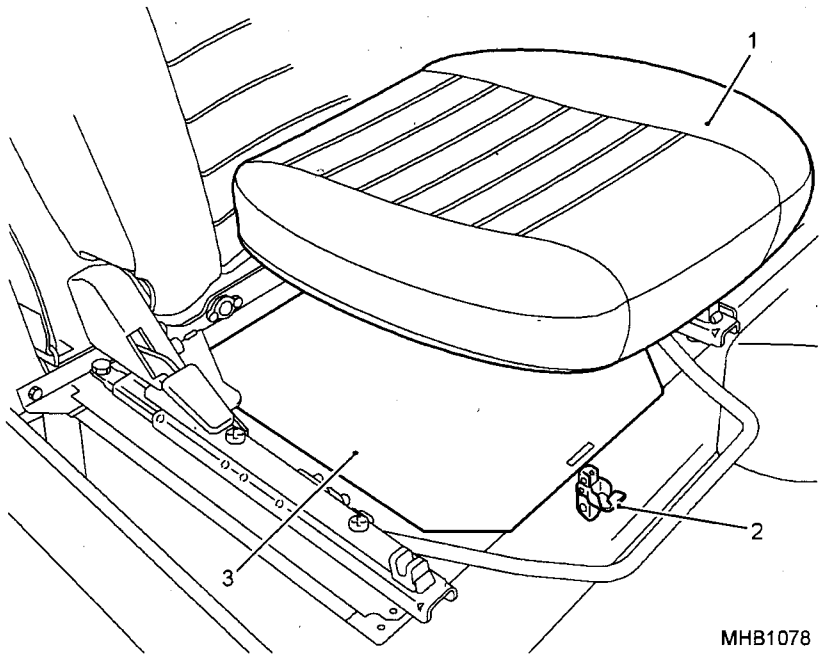

Fig 16 FFR battery storage

RAISED AIR INTAKE

18 The raised intake (Fig 17) ensures a cleaner air supply to the engine when driving in dusty conditions.

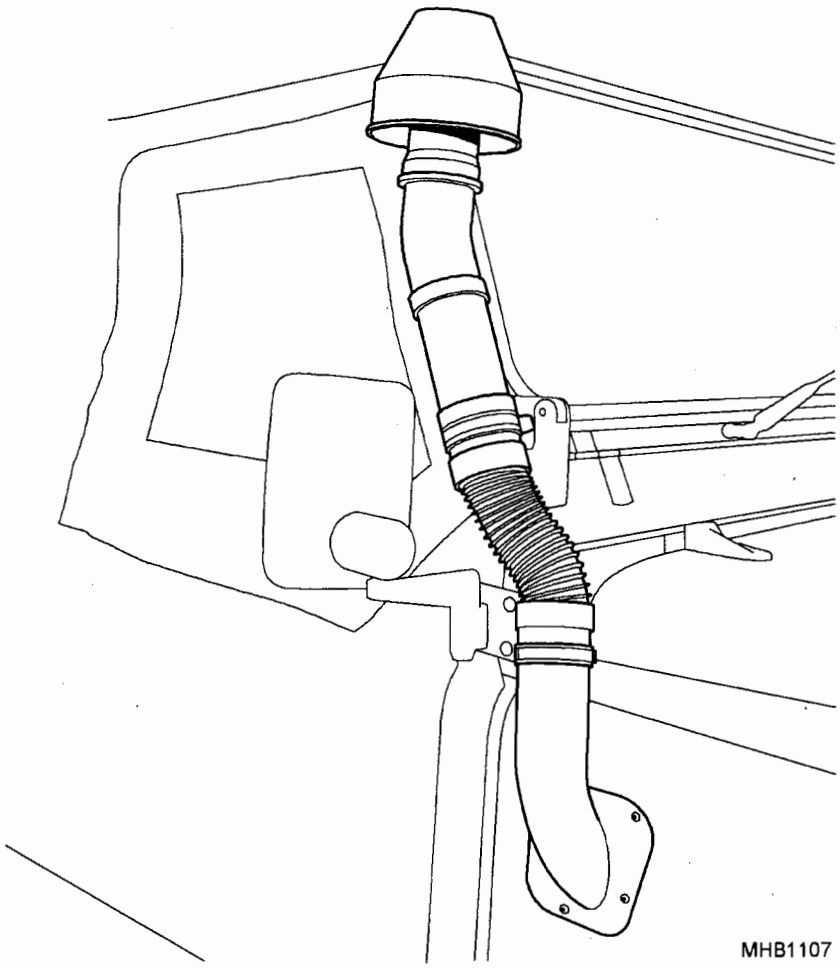

Fig 17 Raised air intake

CHAPTER 2-10

TROPICAL FIELD AMBULANCE

CONTENTS

Para

1 Introduction
2 General
AIR CONDITIONING
4 Temperature control switch
5 Blower motor fan speed control switch
6 Circuit breakers (WARNING)
7 Ventilator deflectors

Fig		Page
1	Air conditioning temperature control	2
2	Blower motor fan speed control switch	3
3	Ventilation deflectors	5/6

INTRODUCTION

1 This sub-chapter describes all the items applicable to the Tropical Field Ambulance which are not covered in the previous chapters.

General

2 All information appertaining to these vehicles can be found in sub-chapter 2-3 Field Ambulance.

AIR CONDITIONING

3 The controls for the air conditioning system are located in the ambulance on the main control panel and the re-circulation grille. They consist of a temperature control switch, and a blower motor fan speed control. Air distribution is achieved via a series of vents located in a roof-mounted duct in the ambulance and in the drivers cab by vents mounted in the side of the evaporator unit.

TEMPERATURE CONTROL SWITCH

4 To operate the temperature control switch, located in the air outlet duct, (Fig 1), rotate clockwise to reduce the ambient temperature within the compartment.

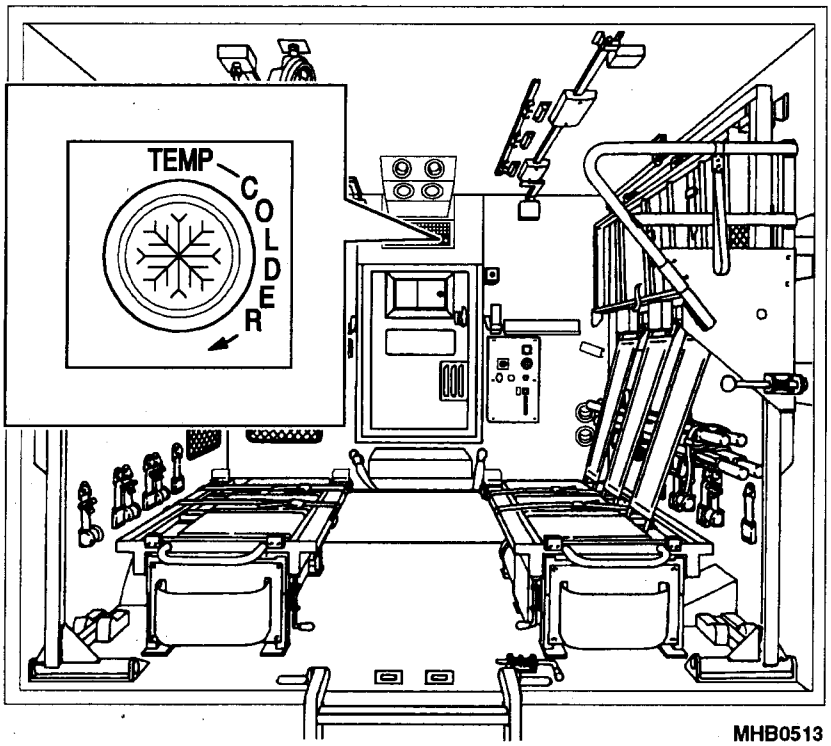

Fig 1 Temperature control switch

BLOWER MOTOR FAN SPEED CONTROL SWITCH

5 This is a rotary switch (Fig 2) with 4 settings as follows.

5.1 Off - the fan is non-operational.

5.2 Low - The fan operates at a low speed.

5.3 Med - The fan operates within the middle range

5.4 High - The fan operates at its optimum level.

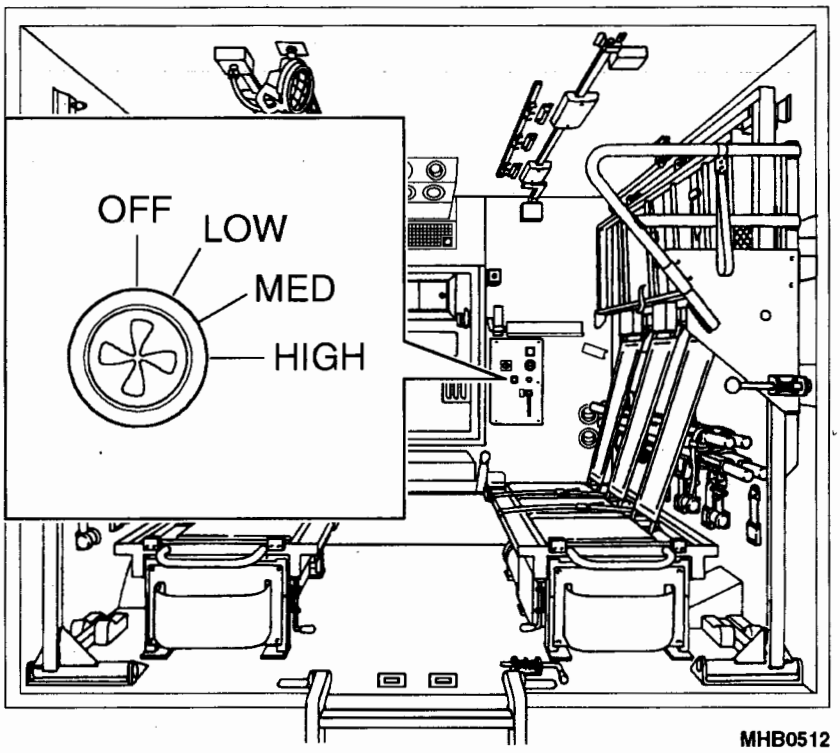

Fig 2 Blower motor fan speed control switch

CIRCUIT BREAKERS

WARNING

CIRCUIT BREAKERS. CB.3 MUST BE SWITCHED OFF WHEN 12V SUPPLY SOCKETS ARE NOT IN USE.

6 There are 5 circuit breakers (8) contained in the panel and they protect the following circuits.

6.1 CB.1 – Air conditioning

6.2 CB.2 – Blowers

6.3 CB.3 - 12 volt socket

6.4 CB.4 – Lights

6.5 CB.5 - 24 volt sockets

VENTILATION DEFLECTORS

7 Air distribution is achieved via a series of vents located in a roof mounted duct in the ambulance (rear body) and in the drivers front cab by vents mounted in the side of the evaporator unit. These vents can be adjusted to alter the direction of air flow (Fig 3).

WARNINGS

(1) DO NOT OPERATE THE SYSTEM WITH ALL OF THE VENTS CLOSED.

(2) DO NOT OPERATE THE SYSTEM IF THE RECIRCULATION GRILLE IS BLOCKED.

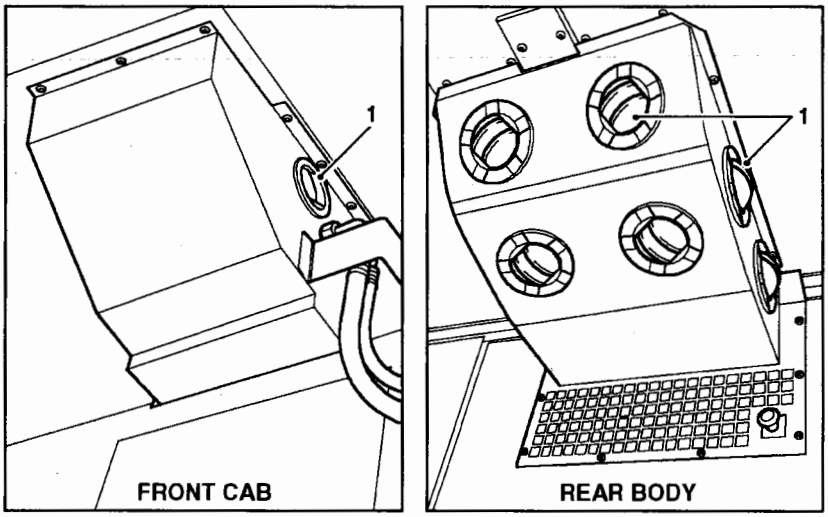

MHB1014

Fig 3 Ventilation deflectors

CHAPTER 2-11

WINTERISED/WATERPROOFED FIELD AMBULANCE

CONTENTS

Para

1 Introduction
2 General
3 Blue flashing beacon switch
4 Siren switch
5 Siren operation

Fig		Page
1	Blue flashing beacon switch	2
2	Siren switch	2

INTRODUCTION

1 This sub-chapter describes all the items applicable to Winterised/Waterproofed Field Ambulance vehicles, which are not covered in the previous chapters.

General

2 All information appertaining to these vehicles can be found in sub-chapter 2-3 Field Ambulance.

BLUE FLASHING BEACON SWITCH

3 This is a two position, rocker type switch (Fig 1) located adjacent to the siren switch to the top and centre of the windscreen. When the lower half of the switch is pressed in, the lights in the roof-mounted beacons will operate.

SIREN SWITCH

4 The siren switch is a two position, rocker type switch (Fig 2) located adjacent to the blue flashing beacon switch to the top and centre of the windscreen. When the lower half of the switch is pressed in, the siren located on the front of the vehicle cab will operate via the horn column stalk.

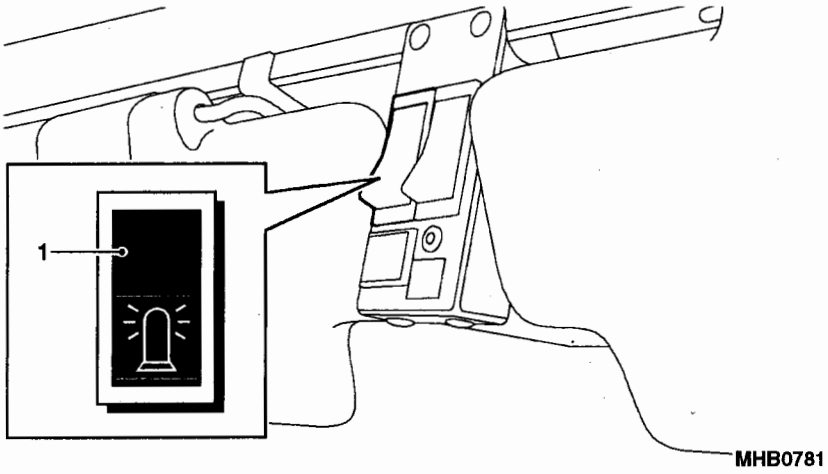

Fig 1 Blue light flashing beacon

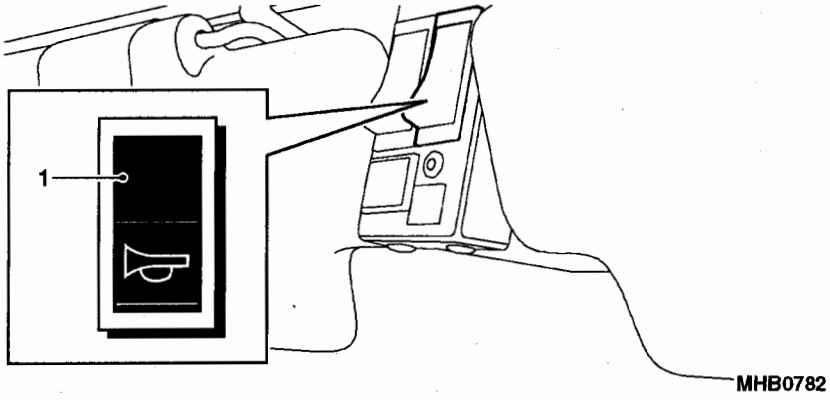

Fig 2 Siren switch

CHAPTER 2-12

WATERISED
WEAPONS MOUNTED INSTALLATION KIT (WMIK)

CONTENTS

Para

1 Introduction
2 Raised air intake
3 Removable windscreen

Fig		Page
1	Raised air intake	2
2	Removable windscreen	3
3	Spare wheel carrier	3

INTRODUCTION

1 This sub-chapter describes all the items applicable to the Waterised Truck Utility Medium (TUM) HS Weapons Mounted installation Kit (WMIK) vehicles, which are not covered in the previous chapters.

RAISED AIR INTAKE

2 The Raise air intake (Fig 1) is provided to allow the vehicle to wade in normal conditions (0.6m). An extension tube is also provided for use when deep wading.

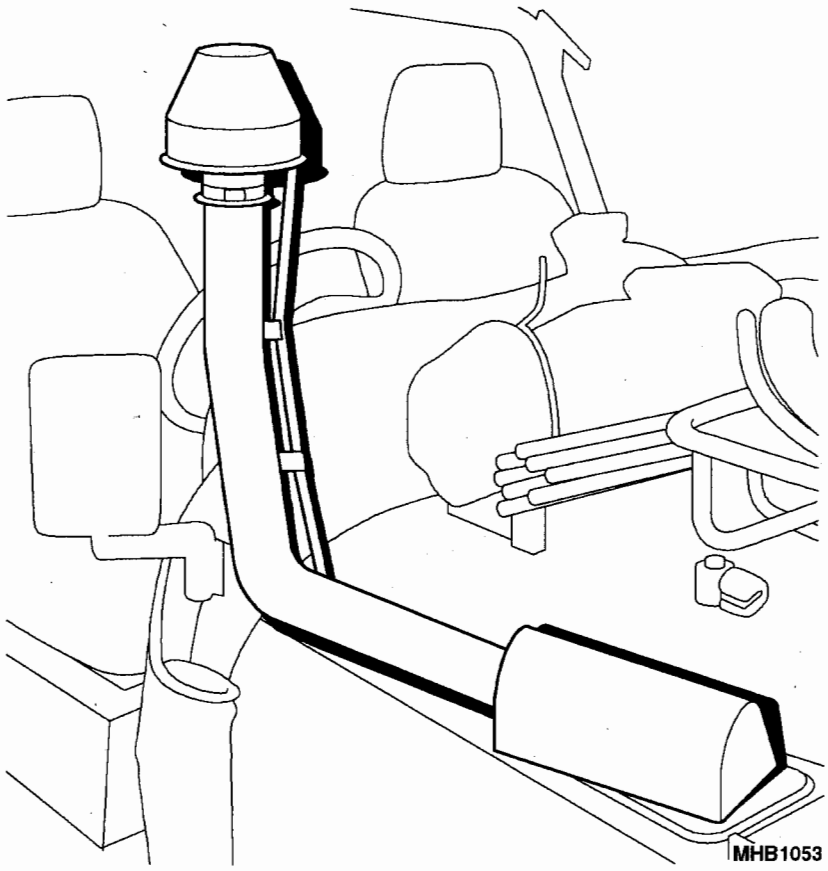

Fig 1 Raised air intake

REMOVABLE WINDSCREEN

3 The front windscreen can be removed from the vehicle when not required. To remove the windscreen, refer to Chapter 3-12.

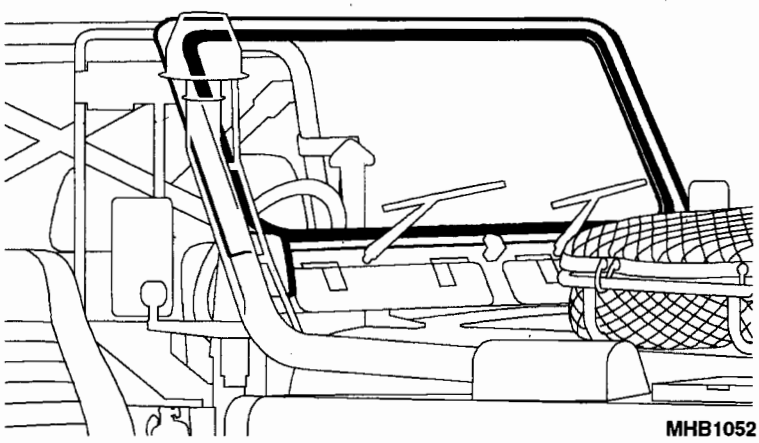

Fig 2 Removable windscreen.

SPARE WHEEL CARRIER

4 Where it has been approved by the Equipment Manager at DE&S, an additional spare wheel carrier may be fitted to the opposite side of the vehicle using existing in service equipment and a long arm mirror.

CHAPTER 3

OPERATING INSTRUCTIONS

CONTENTS

Para

1 Introduction
2 General
3 Use of aviation fuel

INTRODUCTION

1 This chapter describes the Operating Instructions applicable to the Truck Utility Light (TUL) HS, Truck Utility Medium (TUM) HS and (TUM) Ambulance HS variants listed in the following sub-chapters:

1.1 Chapter 3-1 Basic vehicle

1.2 Chapter 3-2 Fitted For Radio (FFR)

1.3 Chapter 3-3 Field Ambulance

1.4 Chapter 3-4 Winterised/Waterproofed

1.5 Chapter 3-5 Winterised

1.6 Chapter 3-6 Air drop

1.7 Chapter 3-7 Helicopter Support Platform

1.8 Chapter 3-8 Commanders IK

1.9 Chapter 3-9 Weapons Mounted Installation Kit

1.10 Chapter 3-10 Tropical Field Ambulance

1.11 Chapter 3-11 Winterised/Waterproofed Field Ambulance

1.12 Chapter 3-12 Waterised Weapons Mounted Installation Kit

General

2 The information given in this chapter is applicable to both left and right hand drive vehicles.

USE OF AVIATION FUEL

3 AVTUR (F-34)/AVCAT (F44) may be used in this vehicle. If this fuel is used, lubricating oil to the ratio of 1 litre of oil/100 litres of fuel must be added to the tank prior to filling. It should be noted that no other type of AVTUR/AVCAT should be used.

CHAPTER 3-1

BASIC VEHICLE

CONTENTS

Para

1 Introduction
2 General
3 Pre-start checks
4 Starting the engine (CAUTION)
5 Starting a cold engine
6 Starting a warm engine
7 Transfer gear/differential lock lever
8 Operating the transfer/differential lock lever (CAUTION)
10 Prop rod
To close the bonnet
11 Batteries (CAUTIONS)
12 Instruments
13 Lights
14 Engine oil
15 Engine cooling system
16 Wheels
17 Tyre wear (WARNING)
21 Tyre pressures
Checking tyre pressures
22 Fuel
23 Fuel cap
24 Extended filler neck
25 Engine front timing cover wading plug
27 Fly wheel housing wading plug
31 Jerry can stowage (TUL)
32 Jerry can stowage (TUM)
35 Front towing pintle
Operating the towing pintle (WARNING)
36 Convoy flag holders
37 Lifting/towing rings
38 12-Pin trailer socket
40 Rotating towing hook (WARNING)(CAUTION)
41 Pick and shovel
42 Windscreen drop down

(continued)

CONTENTS (continued)

Para

43 Hood removal and refitting
Removal
Refitting
44 Roll cage and front hood support frame
45 Removal
46 Refitting
47 Upper door frame
48 Vehicle recovery
49 Towing the vehicle on four wheels
54 Suspended tow on two wheels (CAUTIONS)
56 Recovering wheel grip
57 Towing
58 Transporting the vehicle
59 Driving techniques
60 Gear ranges
61 Transfer gear changing (CAUTION)
63 Match engine speed to the gear selected
66 Riding the clutch
67 Braking
68 Engine braking
69 Rough rocky tracks (WARNING)
71 Wading
After being in water (CAUTION)
73 Descending steep slopes
74 Driving on soft ground
75 Ground clearance
76 Rutted and existing wheel tracks
77 Ice and snow
78 Negotiating a "V" shaped gully
79 Crossing ridges and ditches
Crossing over a ridge
Crossing a ditch
80 Traversing slopes
81 Climbing steep slopes
83 Driving in soft dry sand
84 Tyre pressures
85 Repositioning spare wheel mount (CAUTION)
87 Repositioning Bowman spare wheel mount (CAUTION)
89 Repositioning long arm mirror (CAUTION)
90 Infrared lamp adjustment (WARNING)

(continued)

CONTENTS (continued)

Table		Page
1	Pressure for Goodyear G90 tyres	39

Fig		Page
1	Prop rod	7
2	Fuel cap	11
3	Extended filler neck	12
4	Engine front timing cover wading plug	12
5	Flywheel housing wading plug	13
6	Jerry can stowage (TUL)	14
7	Jerry can stowage (TUM)	15
8	Front towing pintle	16
9	Convoy flag holder	17
10	Lifting/towing rings	17
11	12-pin trailer socket location	18
12	12-pin trailer socket operation	19
13	Rotating towing hook location	19
14	Rotating towing hook operation	20
15	Pick and shovel	21
16	Windscreen lowering operation	22
17	Hood support frames	24
18	Door glass panels	26
19	Lashing rings	29
20	Holding the steering wheel	31
21	Wading	33
22	Descending a steep slope	32
23	Negotiating a "V" shaped gully	35
24	Crossing over a ridge	36
25	Crossing a ditch	37
26	Traversing a slope	38
27	Repositioning spare wheel mount	41
28	Blanking plate	43
29	Repositioning Bowman spare wheel retaining plate	43
30	Mirror removal	45
31	Infrared lamp adjustment	46

INTRODUCTION

1 This sub-chapter gives the Operating Instructions applicable to the Truck Utility Light (TUL) HS and Truck Utility Medium (TUM) HS vehicles.

General

2 Before operating the vehicle, the operator must be acquainted with the operating instructions given in the subsequent paragraphs.

PRE-START CHECKS

3 Before starting the vehicle check the vehicle as described in (refer to Cat 601 Table 6) and paragraphs 12,13,14,15,16 and 17 in this sub-chapter.

STARTING THE ENGINE

CAUTION

> **ETHER. The use of ether in any form must not be used to start the engine, as the very high cylinder pressures that are developed under these conditions can lead to serious and expensive mechanical failure.**

4 When starting the engine, do not operate the accelerator pedal during the engine starting procedure. The vehicle diesel engine will start satisfactorily with the proper use of the heater plugs down to temperatures of -32° C (-25.6° F) even with the battery at only 80% charged, provided that the correct grade of oil has been used. Use the heater plug position when starting from cold, for example, with a cold engine and an air temperature of 0° C (32° F) the key should be held in the heater plug position until the light extinguishes. An amber warning light will illuminate when the engine starter key is turned to the 'heater plug' position.

Starting a cold engine

5 When starting a cold engine do not operate the accelerator pedal during the engine starting procedure. Turn the starter key and hold it in the heater position until the light extinguishes, then turn the key further against spring pressure to start the engine, then release the key immediately the engine starts.

Starting a warm engine

6 When starting a warm engine do not operate the accelerator pedal during the engine starting procedure. Turn the key to the engine start position and release immediately the engine starts.

TRANSFER GEAR/DIFFERENTIAL LOCK LEVER

7 The transfer gear/differential lock lever is positioned rearward of the main gear change lever. The correct method of operating the gearbox is as follows:

Operating the transfer/differential lock lever

CAUTION

CHANGING GEAR. Changes from 'H' (high) to 'L' (Low) should only be attempted when the vehicle is stationary

8 The correct method of transfer gear changing is described as follows:

8.1 Depress the clutch pedal and push the lever fully forward, release the clutch.

8.2 Should there be any problem in changing gear do not force the lever.

8.3 With the engine running, engage a main gear and release the clutch momentarily, then return the main gear lever to neutral and try the transfer gear lever again.

8.4 Changes from low 'L' to high 'H' can easily be made without stopping the vehicle as follows:

8.5 Depress the clutch pedal and release the accelerator pedal as for normal gear change.

8.6 Move the transfer lever firmly into neutral and release the clutch pedal. Depress the clutch pedal again and move the transfer lever firmly into high 'H' position.

8.7 Move the main gear lever to second gear and release the clutch pedal while depressing the accelerator to take up the drive smoothly.

8.8 As the vehicle accelerates, change gear in the main gearbox in the normal way.

NOTE

This operation can be carried out smoothly and quickly after a little practice.

9 The correct method of differential lock gear changing is described as follows:

9.1 The vehicle has a permanent four-wheel drive and a third differential fitted in the transfer gearbox between the drives to front and rear axles.

9.2 The third differential allows a high degree of mobility in off road use.

9.3 In conditions requiring maximum traction to both axles, the gearbox differential unit can be locked so that both output shafts rotate at the same speed.

9.4 The differential is controlled through the combined transfer/differential lock lever described earlier.

9.5 The control can be operated while the vehicle is travelling without wheel slip and in a straight line, or while it is stationary. The differential should be locked for slippery or doubtful surface conditions.

9.6 If the warning light remains on, this indicates that the transmission is 'wound-up'. The vehicle must be stopped and reversed for a few metres to 'unwind' the transmission; the warning light will then be extinguished and the vehicle can proceed.

9.7 Under certain conditions a slight delay may be experienced before the differential becomes locked, with subsequent warning light illumination.

NOTES

(1) This delay is a built in safety precaution and ensures that gears are correctly aligned before differential locking commences.

(2) To avoid unnecessary wear and possible damage to the transmission and final drive, it is important that full throttle openings are not used when the vehicle is operating in first and second gear low range with the differential locked. A return to the unlocked position must be made as soon as traction is regained.

(3) The differential lock is a spring engage/disengage action. The warning light sensor is fitted in the gearbox. Some delay may occur whilst the vehicle is stationary.

PROP ROD

10 The prop rod is located underneath the bonnet. To open the bonnet refer to Bonnet release handle (Chapter 2-1 paragraph 38). To open and close the bonnet proceed as follows:

10.1 Release the bonnet safety catch, (Fig 1 (3)) lift the bonnet up and pull the prop rod (2) from the stowage clip (1).

10.2 Locate the upper end of the prop rod in the hole (4) in the bracket on the underside of the bonnet.

10.3 Hold the bonnet open, pull the prop rod from the bracket and locate it into the stowage clip.

10.4 Push the bonnet down firmly until it locks. Do not allow the bonnet to drop from the fully open position.

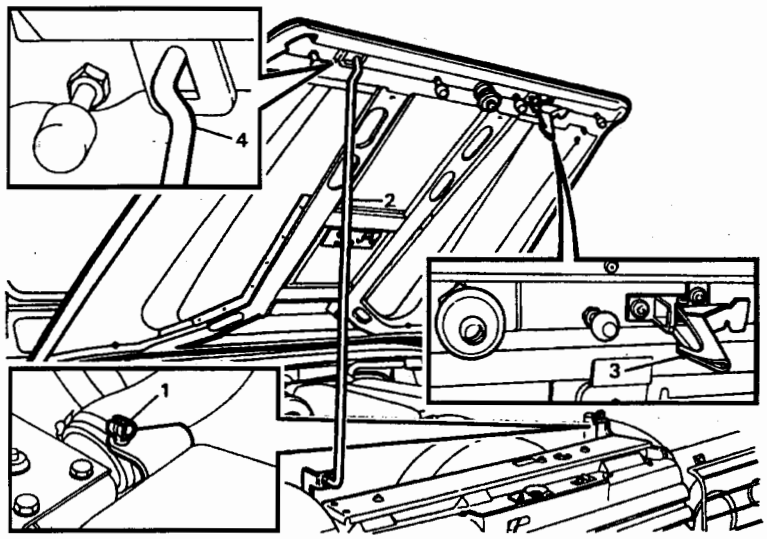

MHB0062

Fig 1 Prop rod

BATTERIES

CAUTIONS

(1) BATTERY. Do not let the engine run with the battery is disconnected.

(2) BATTERY CHARGER. Do not use a high-speed battery charger as a starting aid. When using a charger to charge the battery, it must be disconnected from the rest of the vehicle's electrical system.

(3) POLARITY. When installing, ensure that the batteries are connected in correct polarity.

(4) WELDING. The battery must be disconnected before carrying out any electrical welding on the vehicle.

(5) BATTERY TYPE. If a new battery is fitted to the vehicle, it should be the same type as the original battery. Alternatives may vary in size and terminal positions and this could lead to a possible fire hazard if the terminals or leads come in contact with the battery clamp assembly. When fitting a new battery ensure that the terminals and leads are well clear of the battery clamp assembly.

11 The air portable batteries are located in a covered well underneath the left-hand seat. They are connected in series to give a 24 volt supply and are of a low maintenance type requiring levels to be checked dependant on the climatic conditions. The electrolyte level should be checked from one year (hot climates) to three years (temperate climates). Check if maintenance is required (refer to Chapter 4-1 paragraph 35).

NOTE

If air portable batteries fail to recharge refer to Cat 512 Chapter 31-1 Chart Number 5.

INSTRUMENTS

12 When the engine is running check that the following instruments and warning lights operate correctly:

12.1 Oil pressure warning light is extinguished.

12.2 Cold start warning light is extinguished.

12.3 Engine start warning light is extinguished.

12.4 Fuel level indicator is operating.

12.5 Coolant temperature indicator is operating.

12.6 All relevant warning lights are operable, that is, the side lights, turn lights main beam, rear fog lights and differential lock.

LIGHTS

13 Check the operation of all exterior lights and renew any that are defective before taking the vehicle on to the road (refer to Chapter 4-1 paragraph 2).

ENGINE OIL

14 Check the engine oil level using the dipstick. The dipstick is located to the left-hand side of the engine. Top up with the specified oil (refer to Chapter 4-1 paragraph 27).

ENGINE COOLING SYSTEM

15 Check the engine cooling system (refer to Chapter 4-1 paragraph 43) and top up as necessary.

WHEELS

16 Check the tyres for correct pressures, also for wear, chafing and imbedded foreign bodies.

Tyre wear

WARNING

DO NOT USE TYRES WITH EXCESSIVELY WORN TREADS. TYRE WEAR SHOULD BE CHECKED AT EVERY MAINTENANCE INSPECTION.

17 Check tyres for tread depth and visually for external cuts in the fabric, exposure of ply or cord structure.

18 Most tyres fitted to the vehicles are fitted as original equipment which include wear indicators in their tread pattern. When the tread has worn to a remaining depth of 1,16 mm (0.06 in) the indicators appear at the surface as bars which connect the tread pattern across the full width of the tyre.

19 When the indicators appear in two or more adjacent grooves, at three locations around the tyre, a new tyre should be fitted.

20 If the tyres do not have wear indicators, check daily. If the tread has worn to a depth of 1,6 mm (0.06 in), new tyres should be fitted. Do not continue to use tyres that have worn to the recommended limit or the safety of the vehicle could be affected and legal regulations governing tread depth may be broken.

Tyre pressures

21 Tyre pressures should be checked daily.

21.1 Whenever possible check with the tyres cold as the pressure is about 0.14 bar (1.42 lbf/in^2) higher at running temperatures.

21.2 Always replace the valve caps as they form a positive seal on the valves.

21.3 Any unusual pressure loss in excess of 0,21 bar (3lbf/in2) per week should be investigated and corrected.

21.4 Always check the spare wheel so that it is ready for use at any time.

21.5 At the same time remove embedded flints etc., from the tyre treads with the aid of a penknife or similar tool and check that the tyres have no breaks in the fabric or cuts to sidewalls etc. Clean off any oil or grease on the tyres using white spirit sparingly.

21.6 Check that there are no lumps or bulges in the tyres or exposure of the ply or cord structure.

21.7 Maximum tyre life and performance will only be obtained if the tyres are maintained at the correct pressure (refer to Cat 601 Table 3).

FUEL

22 Check the fuel level using the fuel level indicator and if low, refill with the correct fuel. The fuel cap is located on the right-hand side of the vehicle.

CAUTION

DO NOT over fill the tank, if a full tank of fuel is required, stop filling immediately the fuel pump trips out, do not carry on and fill to the top of filler neck.

Fuel Cap

23 The fuel cap (Fig 2 (2)) is secured by a lock located in the centre of the filler cap on both TUL and TUM vehicles. To release the cap proceed as follows:

23.1 Insert the key into the lock (1) and turn in an anti-clockwise direction.

23.2 Turn the cap in an anti-clockwise direction to remove.

23.3 To replace the cap fit and turn in a clockwise direction and lock using the key.

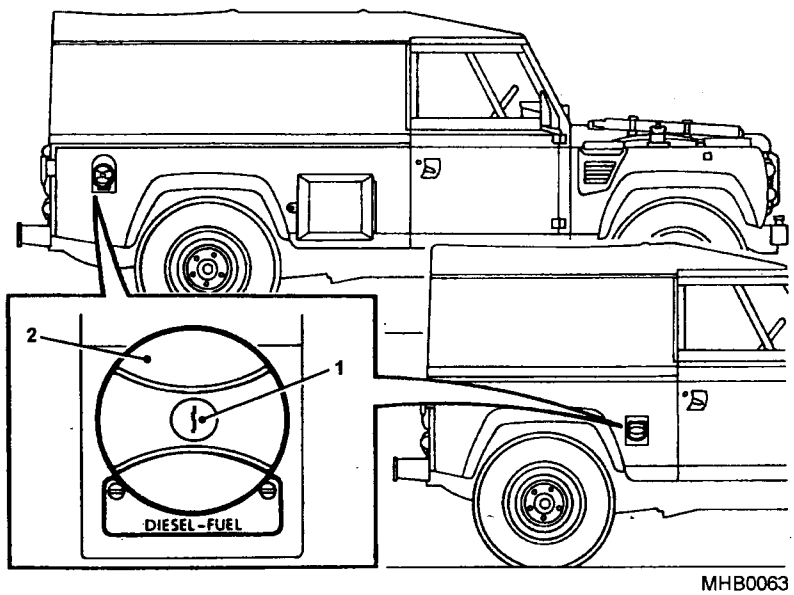

Fig 2 Fuel cap

EXTENDED FILLER NECK

24 The vehicle is fitted with an extended filler neck for ease of filling when using a jerry can. To use the filler neck proceed as follows:

24.1 Open the filler cap, as described in paragraph 23, to gain access to the filler neck.

24.2 Pull the inner filler neck (Fig 3) outwards to its fullest extent and rotate slightly, this locks the neck in place.

24.3 To remove the filler neck for cleaning purposes pull the neck out, rotate and then pull again, this releases the filler neck.

24.4 Clean the filter gauze at the base of the filler neck; once clean replace it into the main neck of the fuel tank.

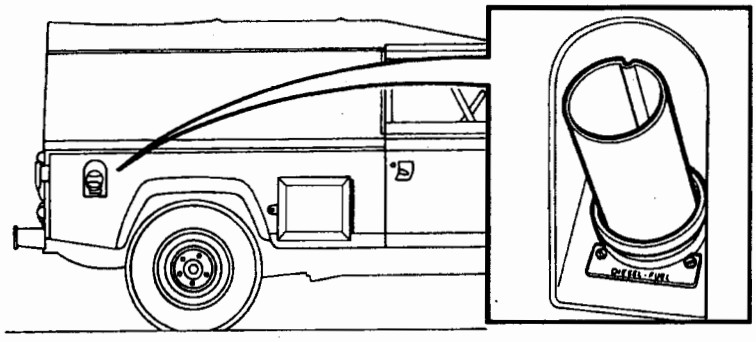

MHB0064

Fig 3 Extended filler neck

ENGINE FRONT TIMING COVER PLUG

25 The engine front timing cover plug (early versions) is located at the bottom of the front timing cover (Fig 4).

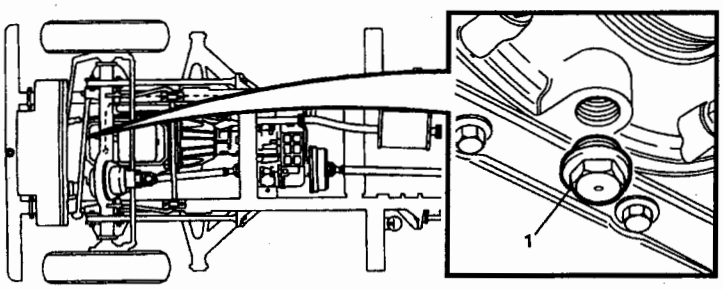

MHB0065

Fig 4 Engine front timing cover wading plug

26 The plug (1) should only be removed when the vehicle is being serviced to ensure that the bleed hole is not blocked.

NOTE

Later versions of the timing cover have no plug but a small hole cast into it.

FLYWHEEL HOUSING WADING PLUG

27 By fitting the wading plug into the drain hole at the bottom of the flywheel housing, this will prevent the ingress of mud and water when wading.

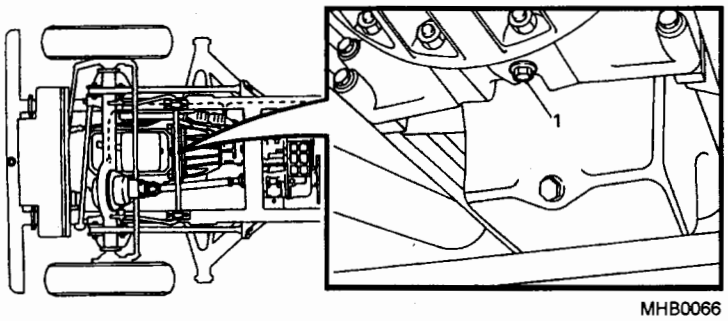

Fig 5 Flywheel housing wading plug

28 The plug (Fig 5 (1)) should only be fitted when the vehicle is expected to do wading or very muddy work.

29 When the plug is in use it must be removed periodically and the housing allowed to drain out before it is replaced.

30 When the plug is not in use it should be stowed away in the tool roll which is located behind the right hand seat.

JERRY CAN STOWAGE (TUL)

31 The stowage facility for the TUL is situated in the rear of the vehicle against the bulkhead (Fig 6). There is one on either side, behind the seats and these are for water only.

31.1 To release the container, undo the retaining strap and remove from its stowage space.

JERRY CAN STOWAGE (TUM)

32 There are two stowage facilities, one on either side of the vehicle. These are provided for the stowage of two jerry cans on each side.

33 Access is gained by releasing the anti luce cotter (Fig 7 (2)) securing the compartment door (1). A padlock facility is provided for security.

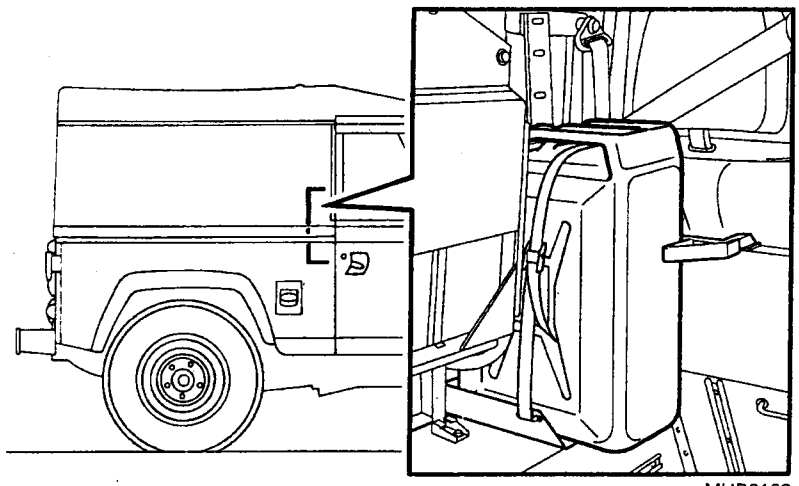

MHB0183

Fig 6 Jerry can stowage (TUL)

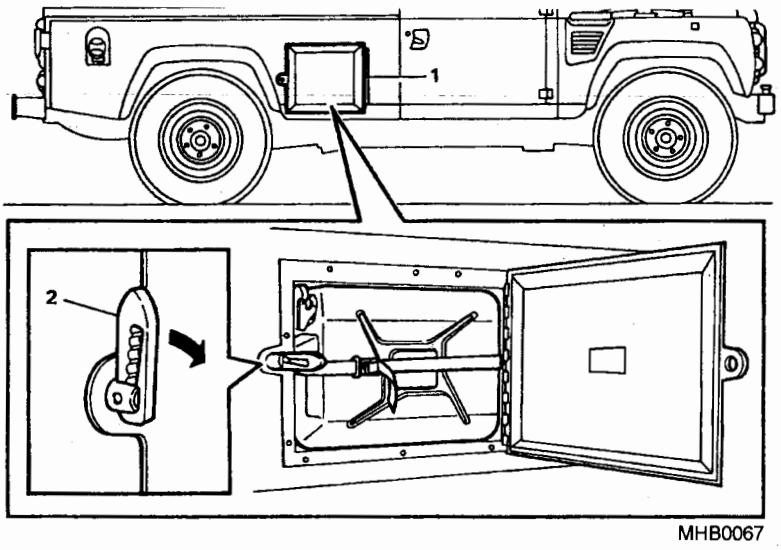

Fig 7 Jerry can stowage (TUM)

34 A warning label is fixed to the inside of the right hand compartment door to inform personnel that the compartment is for jerry cans only.

NOTE

A label is located on the inside of the locker door to indicate whether the jerry cans are for fuel or water.

FRONT TOWING PINTLE

35 The front towing pintle (Fig 8) is integral with the front bumper. To operate the towing pintle proceed as follows:

35.1 Turn the pintle 90°, then pull to release from the retaining mechanism.

35.2 Lift the pintle to provide access to the recess in the bumper.

35.3 Replace the pintle and turn to lock it into position.

WARNING

FAILURE TO ROTATE THE PINTLE INTO THE "LOCKED" POSITION (INTO THE LOWER SPRING CLIP) MAY RESULT IN THE PINTLE VIBRATING LOOSE DURING USE!

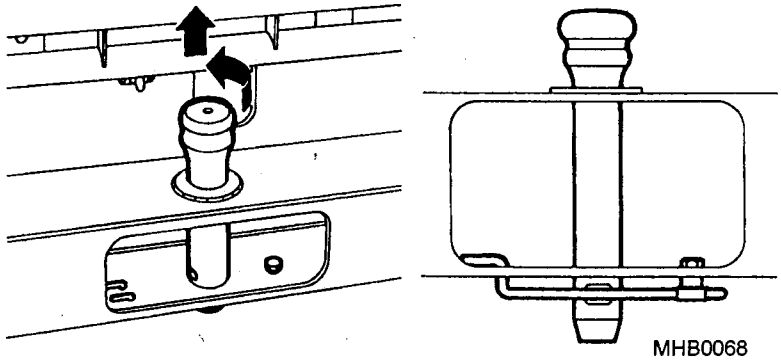

Fig 8 Front towing pintle

CONVOY FLAG HOLDER

36 This is located to the driver's side of the front bumper (Fig 9) for the purpose of holding a flag. This may be repositioned to the passenger's side when required.

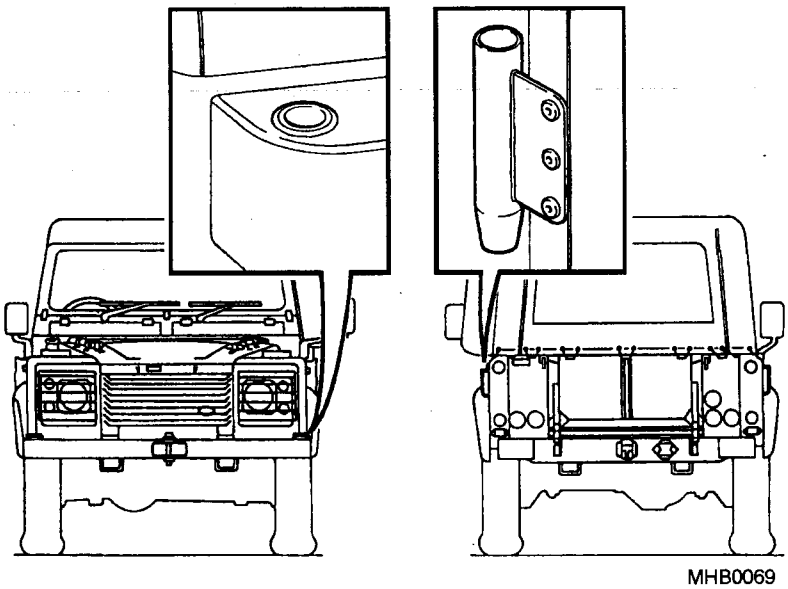

Fig 9 Convoy flag holder

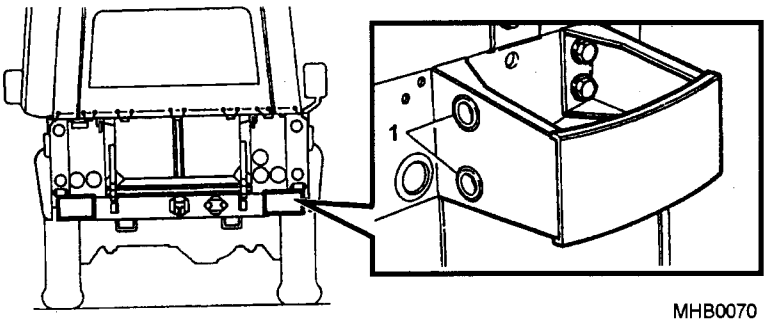

Fig 10 Lifting/towing rings

LIFTING/TOWING RINGS

37 The lifting/towing rings are located on top of the front bumper and are bolted to the chassis members. The rear towing rings are located in the rear bumperette (Fig 10 (1)).

12-PIN TRAILER SOCKET

38 The trailer socket (Fig 11) is located to the right of the towing hook at the rear of the vehicle. When not in use, this socket is protected by a spring loaded cover.

39 To use the socket, lift the cover (Fig 12 (1)) and insert the trailer plug pushing it fully home and the lip of the cover locates in the slot in the plug case.

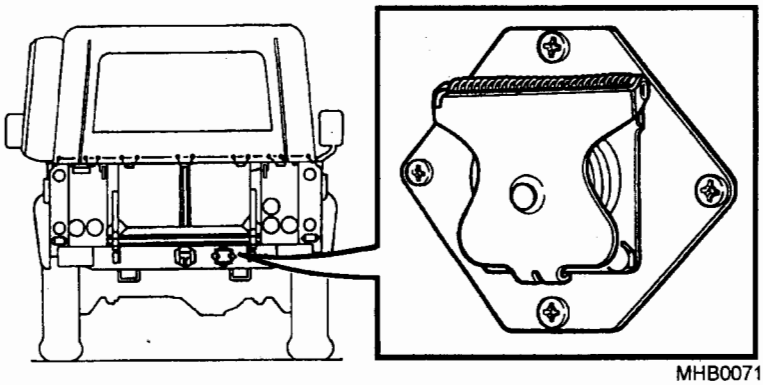

MHB0071

Fig 11 12-pin trailer socket location

ROTATING TOWING HOOK

WARNINGS

(1) TOWING. WHEN THE TOWING HOOK IS IN USE, THE JAW MUST ALWAYS BE LOCKED TO PREVENT THE RING OF THE TOWING BAR OR CHAIN FROM JUMPING WHEN TRAVERSING ROUGH TERRAIN OR ENCOUNTERING SUDDEN DIPS IN THE ROAD

(2) INCORRECT USE. THE INCORRECT USE OF THE ROTATING TOWING HOOK COULD RESULT IN DAMAGE TO EQUIPMENT OR SERIOUS PERSONAL INJURY. FOR FULL DETAILS OF CORRECT USE REFER TO ASSOCIATED PUBLICATION 2540-A-100-201, OPERATING INFORMATION FOR PINTLE TOWING, ROTATABLE.

CAUTION

MAINTENANCE. Before use check that the towing pintle is clean, well lubricated and in good condition.

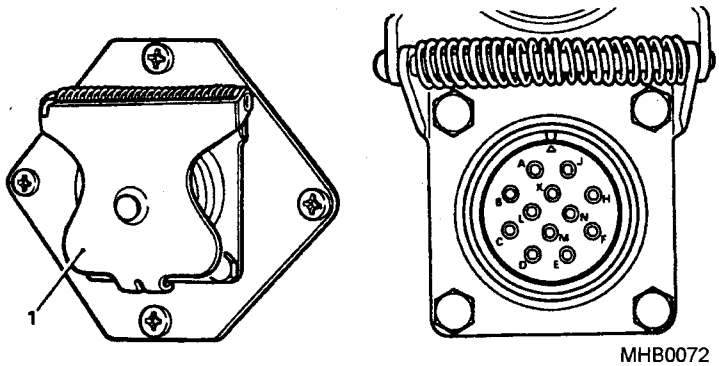

Fig 12 12-pin trailer socket operation

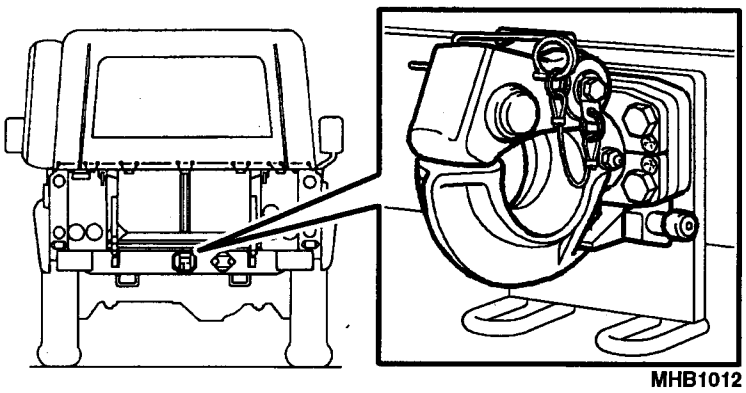

Fig 13 Rotating towing hook location

40 The towing hook is located on the rear cross member (Fig 13). To use the towing hook proceed as follows:

40.1 Remove the locking pin (Fig 14 (1)) securing the jaw.

40.2 Lift the jaw (2) to open the hook.

40.3 Close jaw and secure with the locking pin (1).

40.4 To rotate the jaw, remove the spring clip (6) retaining the anti-rotation pin (4).

40.5 Withdraw the pin and lower the locking plate (5), the jaw will now rotate to the left or right.

40.6 To lock the jaw, return the locking plate into position and insert the anti-rotation pin and secure with the spring clip.

40.7 Always after use, especially when the hook has been used in extreme conditions, clean and oil all moving parts internally and externally.

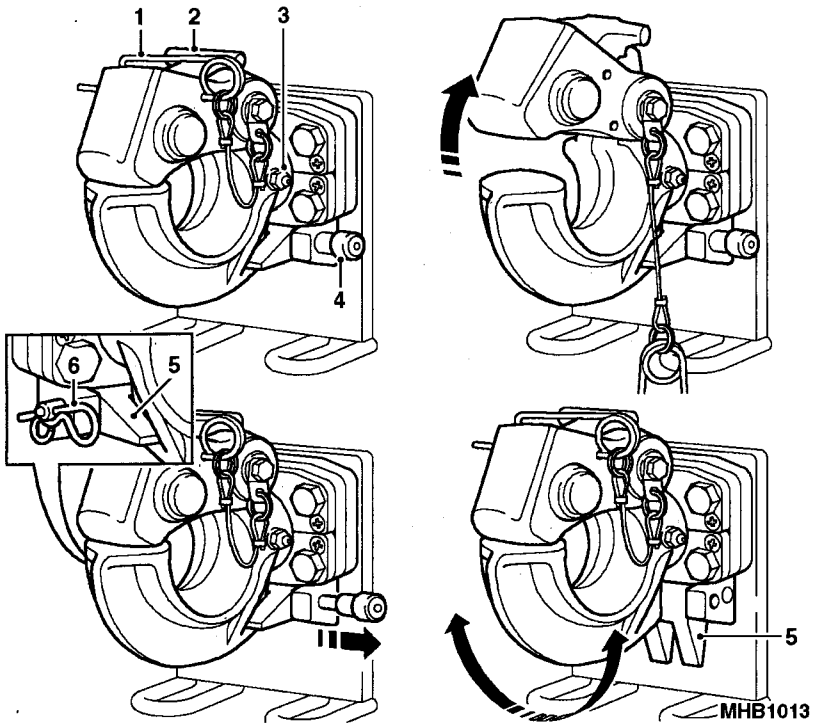

Fig 14 Rotating towing hook operation

40.8 Lubricate the towing hook using the specified grease through the grease nipple (3).

PICK AND SHOVEL STOWAGE

41 The pick and shovel stowage (Fig 15) is located on the bonnet and right hand wing of the vehicle.

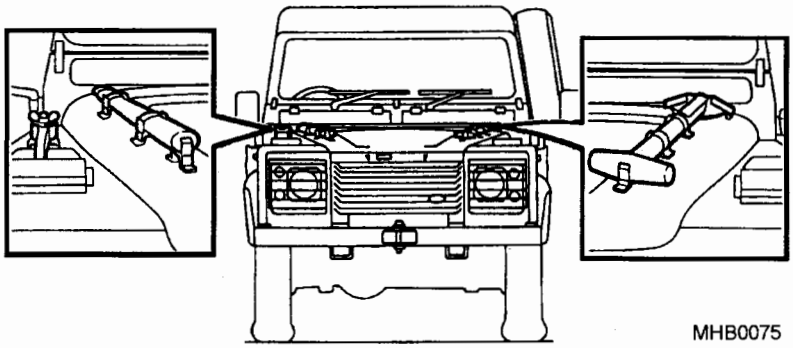

Fig 15 Pick and shovel

WINDSCREEN

42 Provision is made for folding the windscreen down onto the bonnet as follows:

42.1 Remove the hood (refer to paragraph 43).

42.2 Remove the door seals and the door frame top sections.

42.3 Remove the windscreen wiper arms.

42.4 Slacken the cap nuts on the windscreen clamps (Fig 16).

42.5 Pull the clamps forward out of the brackets and lower the windscreen on to the bonnet.

42.6 Reverse the foregoing to secure the windscreen in the upright position.

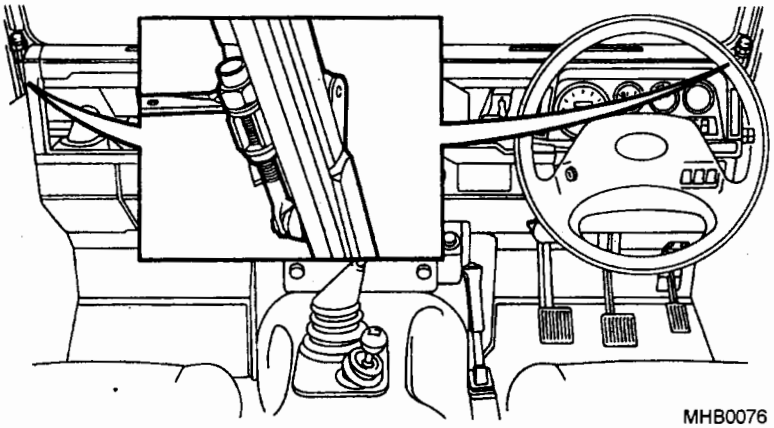

Fig 16 Windscreen lowering operation

HOOD REMOVAL AND REFITTING

43 The hood is made of a plastic material and can be removed from and refitted to the vehicle as follows:

NOTE

The procedure for removing the hood is the same for both TUL and TUM vehicles except that more fastenings are used on TUM vehicles.

43.1 Removal. Release the hood rear fastenings, undo ties, lift up opening section and lay flat on top of roof.

43.2 Slacken side retaining cords and release from clips.

43.3 Release all webbing straps and velcro fastenings from inside the hood.

NOTE

At this stage do not release the hood from the windscreen.

43.4 Fold the side panels of the hood up onto the top of the roll cage.

43.5 Release the hood from the channel above the doors; then fold the hood forward and allow it to come to rest on the vehicle bonnet.

43.6 Pull the hood forward out from the windscreen top rail, complete folding and remove from the vehicle

43.7 Refitting. Position the hood on the vehicle bonnet with the front inside section uppermost.

NOTE

Ensure that the front of the hood is situated centrally over the windscreen before fitting.

43.8 Locate the hood front edge into the recess above the windscreen.

43.9 Using an up and over movement lift the hood up onto the top of the roll cage.

43.10 Unfold and allow the side panels to drop down.

43.11 Adjust the hood to correctly fit over the roll cage and ensure location in the channels above the doors.

43.12 Secure the velcro fastenings and webbing straps to retain hood.

43.13 Locate the side retaining cords in the clips on the vehicle body and tension with the clamps at the rear of the vehicle.

43.14 Unfold the rear entry panel and do up the ties.

43.15 Secure and tension the hood with the front/rear straps and fasteners.

ROLL CAGE AND FRONT HOOD SUPPORT FRAME

44 The support frame takes the plastic flexible hood which wraps around and attaches to it.

NOTE

The procedure for removing the support frame is the same for both TUL and TUM vehicles except that more fixings are used on TUM vehicles.

45 To remove the support frame proceed as follows:

45.1 Remove the hood as previously described (Paragraph 43).

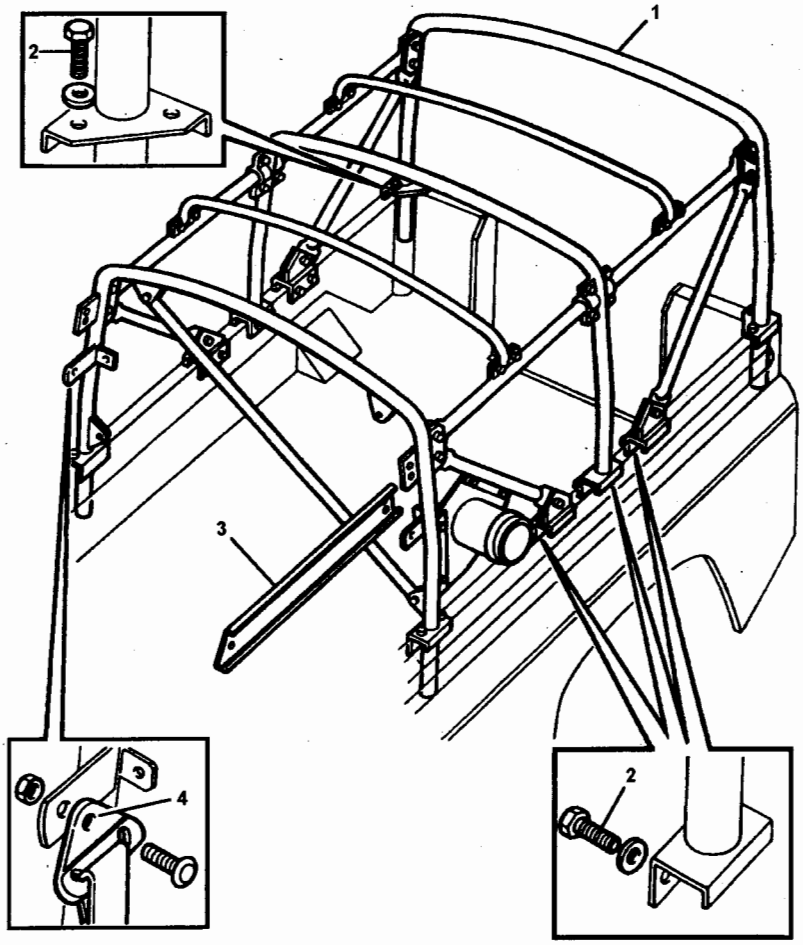

Fig 17 Hood support frame

45.2 Detach the drivers and passenger seat belt top fixings (Fig 17 (4)) from the brackets on the support frame.

45.3 Remove the bolts securing the drain channel to the front support frame (3).

45.4 Remove the nuts, bolts and washers securing the feet of the support frame (2) to the cargo bay side rails.

CAUTION

To carry out the foregoing use suitable lifting gear or sufficient personnel to accomplish the task without risk of injury.

45.5 Raise the support frame (1) clear of the cargo bay and remove from the vehicle.

45.6 Remove the door seals from both door frames.

45.7 Remove the bolts securing the door frame rear sections to the cargo bay side rails. Remove the top fixings to the windscreen and withdraw the door frame sections from the vehicle.

46 To refit the support frame proceed as follows:

46.1 Locate the support frame into the vehicle and secure the feet to the cargo bay sides with the respective bolts.

46.2 Fit the drain channels and secure to the support frame and to their locations above the windscreen.

46.3 Fit and secure the door frame rear sections to the support frame.

46.4 Fit the door seals ensuring that they are correctly seated.

CAUTION

To carry out the foregoing use suitable lifting gear or sufficient personnel to accomplish the task without risk of injury.

46.5 Locate the support frame onto the cargo bay side panels and secure with nuts, bolts and washers.

46.6 Connect the seat belt top fixings to their respective brackets on the front of the support frame.

46.7 Fit the hood as previously described (Paragraph 44).

UPPER DOOR FAME

47 The removal of the upper door frame is achieved by removing the nuts and washers (Fig 18 (1)) from the studs securing the panel to the lower door and lifting the glass panel clear. Refitting is the reverse of the foregoing.

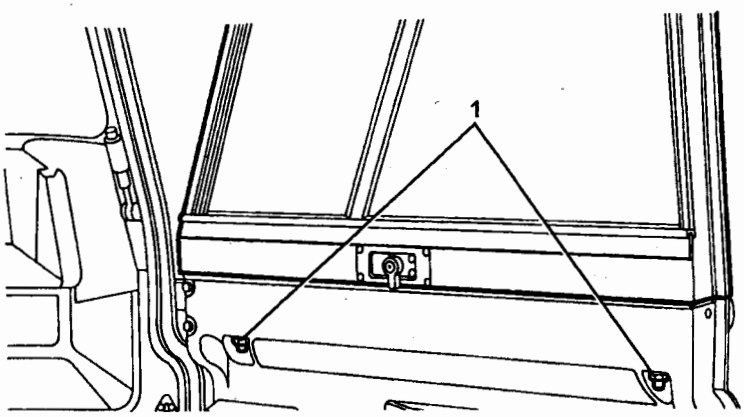

MHB0078

Fig 18 Door glass panels

VEHICLE RECOVERY

48 If the vehicle should suffer a breakdown or accident damage and it becomes necessary to make a recovery, it is essential to adhere to one of the following procedures, depending on the type of recovery to be undertaken. This is because the vehicles have permanent four wheel drive.

Towing the vehicle on four wheels.

49 Set the main gearbox in neutral.

50 Set the transfer box in neutral.

51 Ensure that the differential lock is in the normal "unlocked" position.

52 Secure the towing attachment to the vehicle.

53 Release the handbrake.

NOTE

Unless the engine is running, brake servo cannot be maintained. This will result in a considerable increase in pedal pressure being required to apply the brakes.

Suspended tow on two wheels.

CAUTIONS

Fig 1 **FIXING BOLTS. When the front propeller shaft is to be removed check whether the four rear end fixing bolts in the gearbox flange are entered from the gearbox side. In this event they cannot readily be withdrawn. However, since the flange will revolve as soon as the vehicle is towed the four loose bolts must be tightly secured with nuts or suitably wired to prevent damage to the gearbox end casing.**

Fig 2 **FIXING BOLTS. Where the rear propeller shaft is to be removed ensure that the four fixing bolts are replaced to secure the handbrake drum.**

54 Disconnect the propeller shaft from the axle to be trailed.

55 The steering wheel and/or linkage must be secured in a straight ahead position. The vehicle can then be attached to the breakdown vehicle and raised.

RECOVERING WHEEL GRIP

56 Should the vehicle become immobile due to loss of wheel grip, the following points could be of value:

56.1 Avoid prolonged wheel spin; this will only make matters worse.

56.2 Try to remove obstacles rather than force the vehicle to cross them.

56.3 If the ground is very soft, reduce tyre pressures if this has not been previously done.

56.4 Clear clogged tyre treads.

56.5 Reverse as far as possible, then the momentum reached in going forward again may get the vehicle over the obstacle.

56.6 Brushwood, sacking, or any similar "mat" material placed in front of the tyres will help in producing tyre grip.

56.7 If possible, jack up the vehicle and place material under the wheels. Great care must be taken when doing this to avoid personal injury.

TOWING

57 The weight of the trailer plus load depends upon several factors when towing.

57.1 Towing stability.

57.2 Weight of the vehicle contents including passengers.

NOTE

When part of the vehicle load is transferable, loading the towing vehicle will generally improve the stability of the combination.

57.3 Engine performance is progressively reduced above altitudes of 1800 M (5905 ft).

57.4 For trailer stability (2 wheel trailers) the maximum load imposed on the vehicle tow bar (nose weight) should be 75 kg (165 lbs).

57.5 A maximum trailer weight of 1410 kg applies to both on and off road applications.

57.6 All requests for dispensation are to be submitted to Equipment Support Manager at SUV IPT – DE&S Andover for written authorisation.

NOTE

It is the driver's responsibility to ensure that all regulations with regard to towing are complied with.

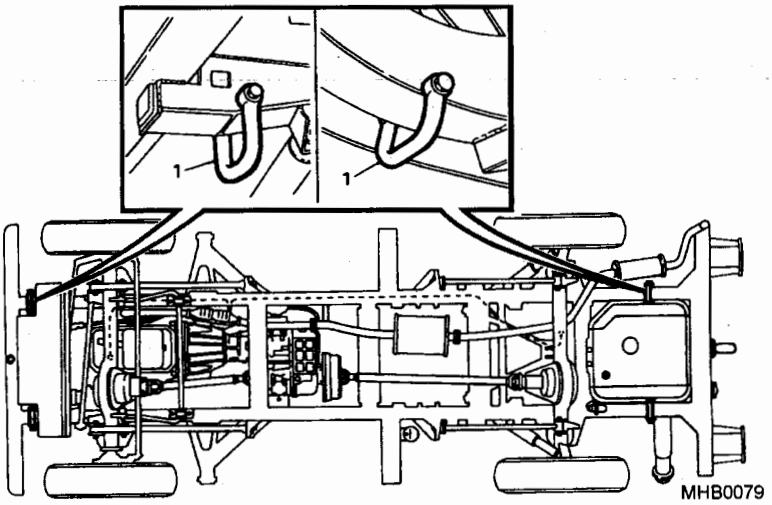

Fig 19 Lashing rings

TRANSPORTING THE VEHICLE

58 Lashing rings (Fig 19 (1)) are available on the front and rear chassis members to facilitate the securing lifting and recovering of the vehicle where necessary.

DRIVING TECHNIQUES

59 The following notes are to give a guide to the operator on how to drive the vehicle over all types of terrain.

Gear ranges

60 Use high ratio for all normal driving on good roads and surfaces. The "Low" ratio can be used for cross-country and rough terrain driving, moving heavy loads or ascending steep slopes. The two ranges may be used progressively when changing up, as conditions demand.

Transfer gear changing

61 As an example of how the full progressive ranges of the gearbox may be used, consider a vehicle which is heavily laden or towing a heavy trailer and which is required to pull away from a standing start up a steep gradient. With the transfer gear in "Low" position, the vehicle will pull away in first gear and the gear changes for the first four gears can be made in the normal way with the main gear lever. When road conditions are suitable for "High" range they may be brought into operation without stopping the vehicle (refer to paragraph 8.4).

CAUTION

This should only be attempted when the vehicle is stationary.

62 To change from "High" (H) to "Low" (L), move the transfer gear lever from fully rearward to fully forward (refer to Paragraph 8.1 to 8.3).

Match engine speed to the gear selected

63 Before traversing a difficult section, select low range differential, locked and a suitable gear, which for most purposes, second or third is satisfactory.

64 Remain in this gear whilst driving and use care when applying the accelerator pedal since a sudden power surge may cause loss of traction.

65 Unlock the differential as soon as possible.

Riding the clutch

66 Keep the foot away from the clutch pedal. The practice of resting the foot on the clutch pedal should be avoided. Apart from premature clutch wear, a sudden bump could cause the pedal to be pressed too far disengaging the drive, and causing the vehicle to go out of control.

Braking

67 Keep the application of the brake pedal to a minimum. Braking on wet or muddy slopes can induce sliding and loss of control.

Engine braking

68 Before descending steep slopes, first gear low range with differential locked should be selected and the engine should be allowed to provide the braking. Failure to adopt this procedure may result in loss of control.

Rough rocky tracks

WARNING

HOLDING THE WHEEL. DO NOT HOLD THE STEERING WHEEL WITH THE FINGERS AND THUMBS INSIDE THE WHEEL. A SUDDEN VIOLENT KICK OF THE WHEEL COULD DAMAGE OR EVEN BREAK THE FINGERS. GRIP THE WHEEL ON THE OUTSIDE OF THE RIM WHEN TRAVELLING ACROSS COUNTRY (FIG 20).

69 Although beaten rough tracks can be negotiated in normal drive, it is advisable to lock the differential if there is excessive suspension movement likely to induce loss of traction.

70 As the track becomes rougher and rockier, low range may be necessary to avoid slipping the clutch and to make the vehicle easier to control.

MHB0080

Fig 20 Holding the steering wheel

Wading

71 The maximum advisable depth is 0,6 metres (23.6 in.) (Fig 21). Before wading make sure that the flywheel housing drain plug is in position.

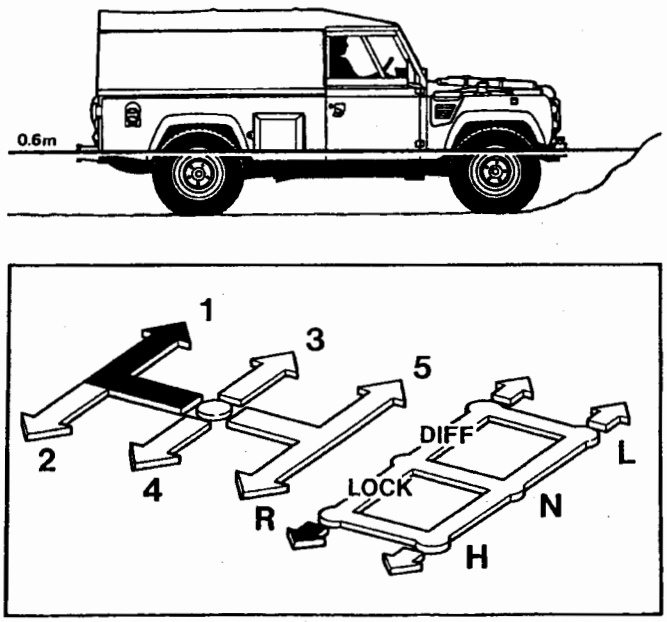

MHB0081

Fig 21 Wading

72 To prevent saturation of the electrical system and air intake, avoid excessive engine speed. A low gear with the differential locked is desirable and sufficient throttle should be maintained to avoid stalling if the exhaust pipe is under water. A speed of 3 mph (5Kph) should be maintained through deep water.

CAUTION.

BRAKING. Do not rely on the handbrake to hold the vehicle once the transmission brake has been subjected to mud and water; leave the vehicle parked in gear.

72.1 After being in water. Make sure that the brakes are dried out immediately so that they are fully effective when needed again. This can be accomplished by driving a short distance with the footbrake applied.

72.2 Remove the flywheel housing drain plug.

Descending steep slopes

73 Stop the vehicle at least a vehicle length before the slope and engage first gear, low range with differential locked (Fig 22). Check gear engagement before moving off. Do not touch the brake or clutch during the descent, the engine will limit the speed, and the vehicle will maintain control while the front wheels are turning. If the vehicle begins to slide, accelerate to maintain directional stability.

73.1 Stop at least a vehicle length (A) before the slope. Select first gear, low range with differential locked.

73.2 Descend (B) using engine retardation.

73.3 When back on level ground (C) unlock the differential then change into second gear.

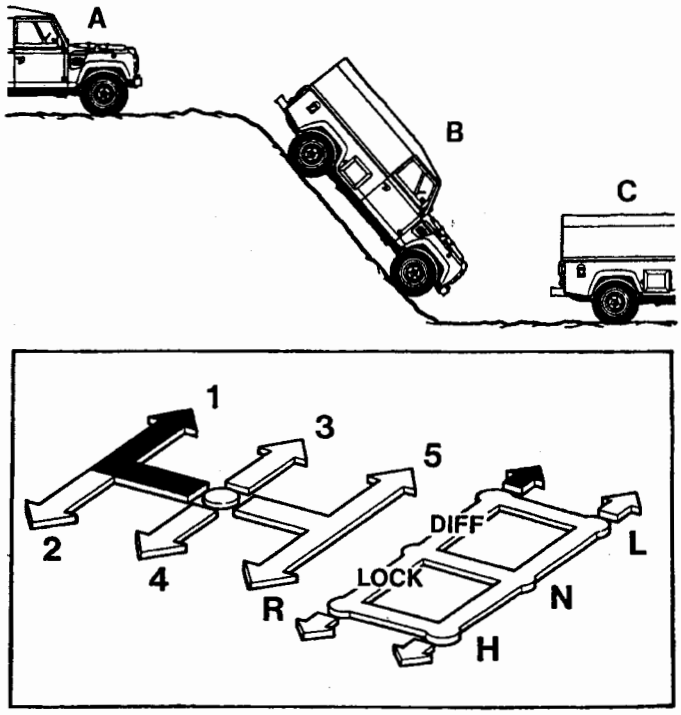

MHB0082

Fig 22 Descending a steep slope

Driving on soft ground

74 Where conditions are soft, such as marsh ground or sand, reduced tyre pressures will increase the contact area of the tyres with the ground. This will help to improve traction and reduce the tendency to sink. Tyre pressures should be reinflated to the standard pressures when firm ground is reached.

Ground clearance

75 Be aware of the need to maintain ground clearance under the chassis and a clear approach and departure angle. Avoid existing deep wheel ruts, sudden changes in slopes and obstacles which could interfere with the chassis.

Rutted and existing wheel tracks

76 Generally the tendency is to over steer the vehicle under these circumstances, resulting in the vehicle being driven on left or right-hand lock in ruts. This should be avoided as it produces drag at the road wheels and can be dangerous, causing the vehicle to veer off the track the moment the front wheels reach level ground or find traction.

Ice and snow

77 The driving techniques are generally the same as driving on mud or wet grass. Select the highest gear possible with the differential locked and use only sufficient engine revolutions to just move the vehicle forward without labouring. Avoid violent movements of the steering wheel and use the brakes, with care, only if necessary.

NOTE

The differential lock can now be engaged or disengaged at any speed providing the road wheels are rotating at the same speed. For example, in slippery conditions if one wheel is spinning, ease off the accelerator before engagement.

Negotiating a "V" shaped gully

78 This should be tackled with caution since steering up or down the gully walls could lead to the vehicle becoming trapped on the bank or an obstacle such as a tree or a rock (Fig 23).

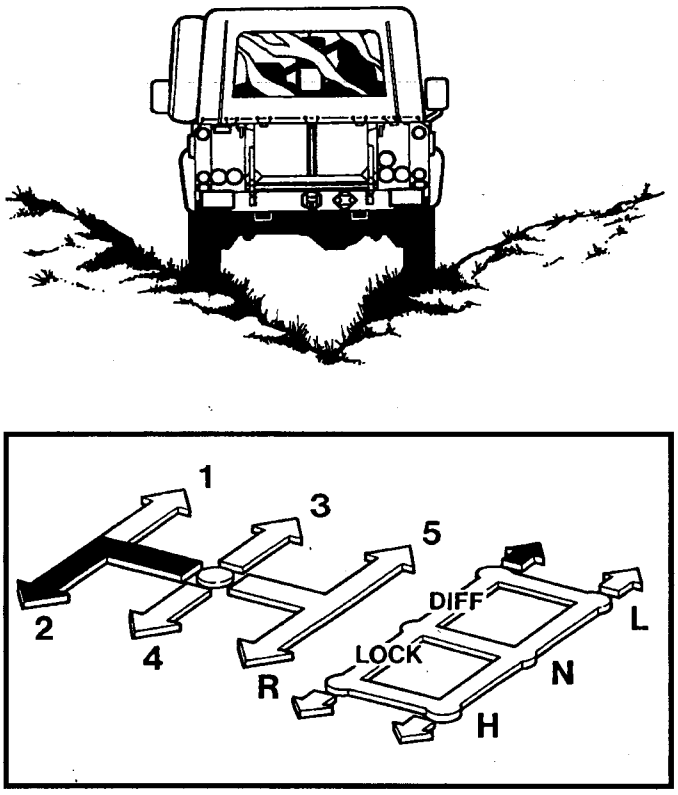

MHB0083

Fig 23 Negotiating a "V" shaped gully

79 Crossing ridges and ditches. Bearing in mind the ramp break over angle and the action of the differential, select a path so that the condition under each wheel is similar to that under the opposite wheel of the same axle. This principle should be applied both in avoiding dissimilar ground under opposite wheels and in assessing the correct angle of approach to an obstacle so as to avoid the wheels being lifted off of the ground.

79.1 Crossing over a ridge. Approach a ridge at right angles so that both front wheels go over together (Fig 24). If approached at any angle traction can be completely lost through diagonally opposite wheels leaving the ground.

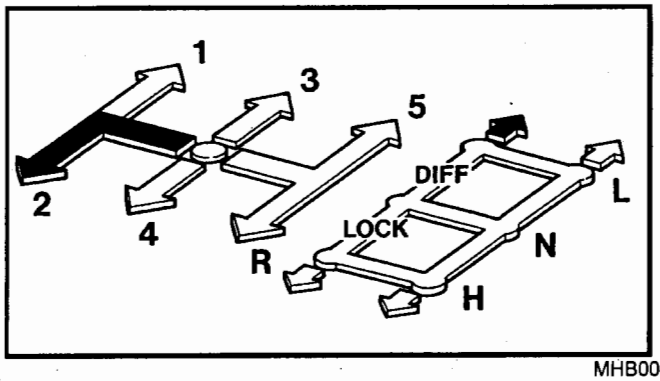

MHB0084

Fig 24 Crossing over a ridge

79.2 Crossing a ditch. Here the opposite to Fig 24 applies. Ditches should be crossed at an angle so that three wheels are kept in contact with the ground (Fig 25). If approached at right angles the two front wheels will drop into the ditch, effectively preventing forward or reverse motion.

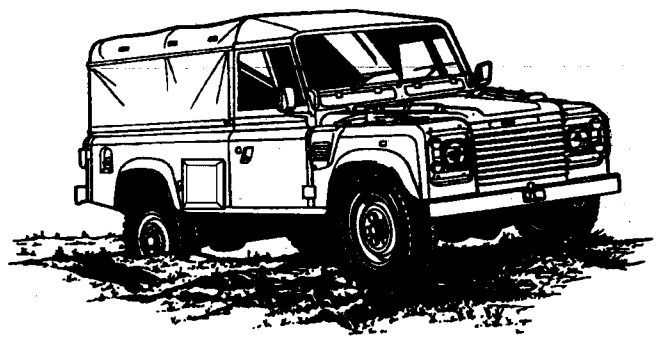

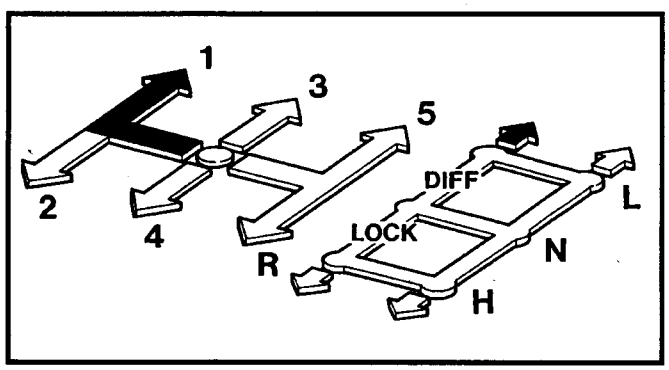

MHB0085

Fig 25 Crossing a ditch

Traversing slopes

80 Traversing a slope should be undertaken in the following way. Check that the ground is firm under the wheels and that it is not soft under the downhill side wheels (Fig 26). Also avoid the uppermost wheels climbing up over a rock or tree root, both of these situations could result in the vehicle rolling onto its side.

Climbing steep slopes

81 This will usually require the use of low range second or third gear with differential locked. Should the slope be slippery, use the highest gear that the engine can manage without labouring or stalling.

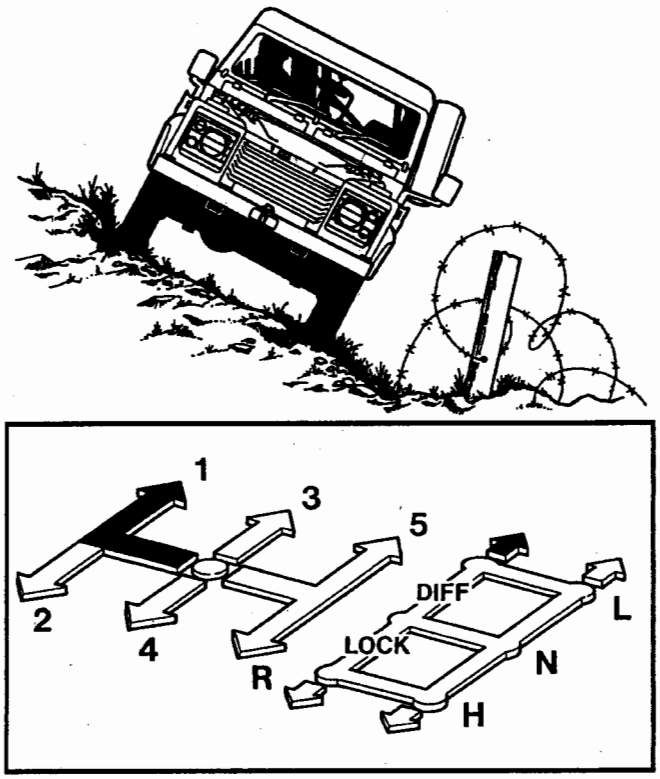

MHB0086

Fig 26 Traversing a slope

82 If the vehicle fails to climb a slope but does not stall, the following procedure should be carried out:

82.1 Hold the vehicle on the footbrake and engage reverse gear as quickly as possible.

82.2 Release the brakes and allow vehicle to reverse down the slope whilst ensuring that both feet are clear of the brake and clutch pedals. If the vehicle stalls on a slope, hold the vehicle on the footbrake, engage reverse gear and remove the feet from both clutch and brake pedals, clutch first.

82.3 Start the engine whilst in gear and allow the vehicle to reverse down the slope, using only the retardation effect of the engine for braking.

82.4 When back on level ground, or where forward traction can be regained, then a possible faster approach will overcome the inertia and the extra momentum will often enable the slope to be climbed.

Driving in soft, dry sand

83 When conditions are soft, reduced tyre pressures will increase the contact area, improve traction and reduce the tendency to sink in it.

83.1 Because of the drag of the sand, the instant the clutch is disengaged the vehicle will stop. If a standing start in sand or on the side of the dunes is necessary, exercise care in applying the accelerator pedal, as sudden power will induce loss of traction and cause the vehicle to dig itself in.

NOTE

After using vehicle in ANY off road situation always check satisfactory operation and condition of brakes, steering, tyres, lights etc. before travelling on public roads.

TYRE PRESSURES

84 Emergency soft pressure should only be used in extreme conditions. When emergency pressures are used a maximum speed of 25 mph (40 kph) should not be exceeded. Pressures should be returned to normal immediately firm ground is regained.

TABLE 1 PRESSURE FOR GOODYEAR G90 TYRES

Serial (1)	Vehicle (2)	Normal (3)		Emergency Unladen (4)		Emergency Laden (5)	
		Bar	lb/in^2	Bar	lb/in^2	Bar	lb/in^2
1	TUL front wheels	2.0	28	1.1	16	1.1	16
2	TUL rear wheels	3.0	42	1.1	16	1.6	23
3	TUM front wheels	2.2	32	1.1	16	1.1	16
4	TUM rear wheels	4.3	60	1.1	16	1.6	23

REPOSITIONING SPARE WHEEL MOUNT

CAUTION

The Spare wheel should always be mounted on the side of the vehicle nearest the roadside kerb.

85 To reposition spare wheel mounting bracket proceed as follows:

85.1 Remove the fixings securing the blanking plate to the opposite side of the vehicle.

85.2 Remove the blanking plate and gasket

85.3 Remove the spare wheel from the spare wheel mounting bracket (refer to Chapter 4-1 para 43).

85.4 Remove the bolts (Fig 27 (3)) washers (2), spacers (5) and nuts (1) securing the mounting bracket (4) to the support frame.

85.5 Hard top vehicles. Remove gasket and seal.

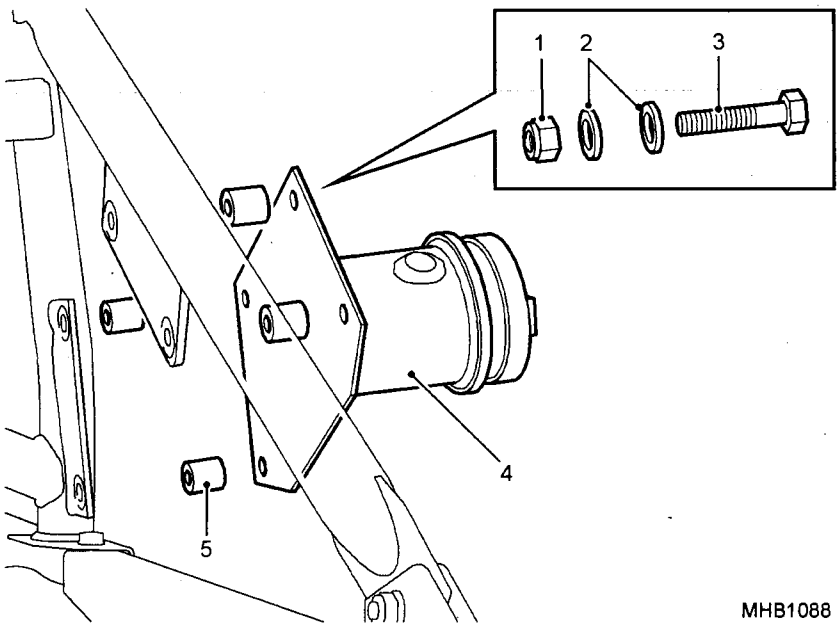

Fig 27 Repositioning spare wheel mount

86 To reposition spare wheel mounting bracket to other side of vehicle proceed as follows:

86.1 Hard top vehicles. Refit gasket and seal.

86.2 Fit spare wheel mounting bracket through the gaskets and locate on support frame.

86.3 Soft top vehicles. Locate spare wheel mounting bracket on support frame.

86.4 All vehicles. Install the bolts, washers, spacers and nuts to secure the mounting bracket.

86.5 Fit the spare wheel on the spare wheel mounting bracket (refer to Chapter 4-1 para 43).

86.6 Fit the blanking plate and gasket to the opposite side of vehicle and secure with fixings.

REPOSITIONING THE BOWMAN SPARE WHEEL MOUNT

CAUTION

The Spare wheel should always be mounted on the side of the vehicle nearest the roadside kerb.

87 To reposition spare wheel retaining plate proceed as follows:

87.1 Remove screw Fig 28 (5) from blanking plate (1) on the opposite side of the vehicle.

87.2 Lift top edge of blanking plate away from side of roof and unhook clip (4).

87.3 Remove blanking plate and gasket (2)

NOTE

Take care not to damage gasket.

87.4 Remove spare wheel from spare wheel mount (refer to Chapter 4-1 para 43).

87.5 Using allen key supplied in tool kit remove three bolts (Fig 29 (4)) and washers (3) securing spare wheel mount (2) to mounting plate (1).

87.6 Remove spare wheel mount.

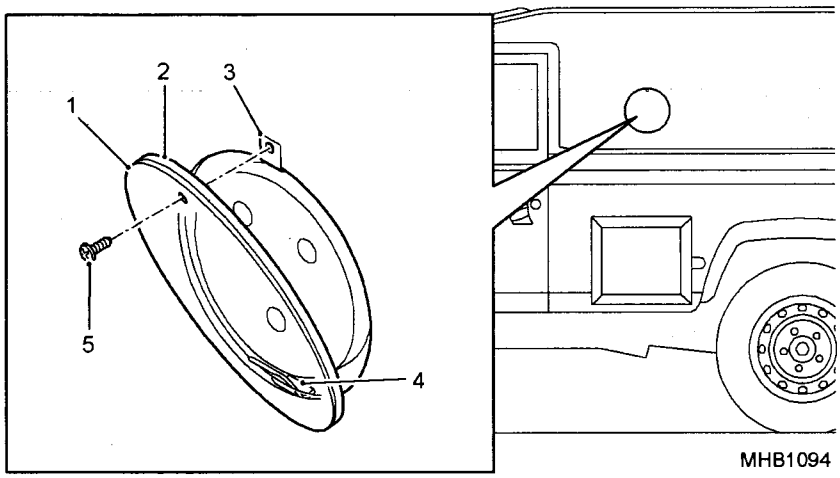

Fig 28 Blanking plate

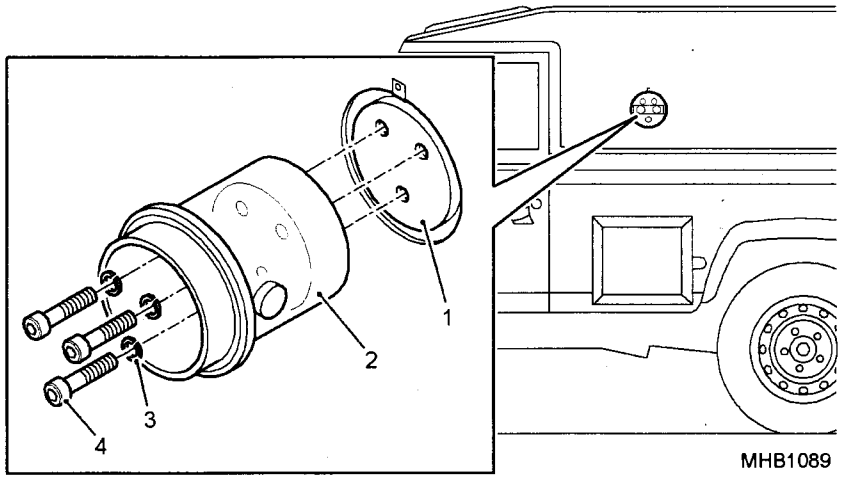

Fig 29 Repositioning Bowman spare wheel retaining plate

88 To reposition spare wheel retaining plate to other side of vehicle proceed as follows:

88.1 Hard top vehicles. Fit spare wheel mount through gaskets and over mounting plate spigot.

88.2 Soft top vehicles. Fit spare wheel mount over mounting plate spigot.

88.3 All vehicles. Install three allen bolts and washers (4) to secure wheel mount (2). Tighten allen bolts (110 Nm) with allen key supplied in tool kit.

88.4 Fit spare wheel on the spare wheel mounting bracket (refer to Chapter 4-1 para 43).

88.5 Install blanking plate and gasket to opposite side of vehicle. Hook clip on the blanking plate into the roof.

NOTE

Take care not to damage gasket.

88.6 Slide blanking plate into position and secure with screw when hole is aligned with spring clip (Fig 28 (3)).

NOTE

Check torque tightness of all fixings after 100 km.

REPOSITIONING LONG ARM MIRROR

CAUTION

The long arm mirror assembly should always be fitted to the side of the vehicle that has the spare wheel mounted.

89 To remove mirror assembly proceed as follows:

89.1 Open front section of door window to provide access to upper hinge internal fixings.

89.2 Close door to retain door and setting in aperture.

89.3 Remove 2 screws holding upper hinge to door.

89.4 Fold door hinge Fig 30 (1)) forward and remove 2 screws (3) retaining mirror assembly (2).

89.5 Repeat with mirror on other side of vehicle.

89.6 Swap mirrors over and refit in reverse order of removal

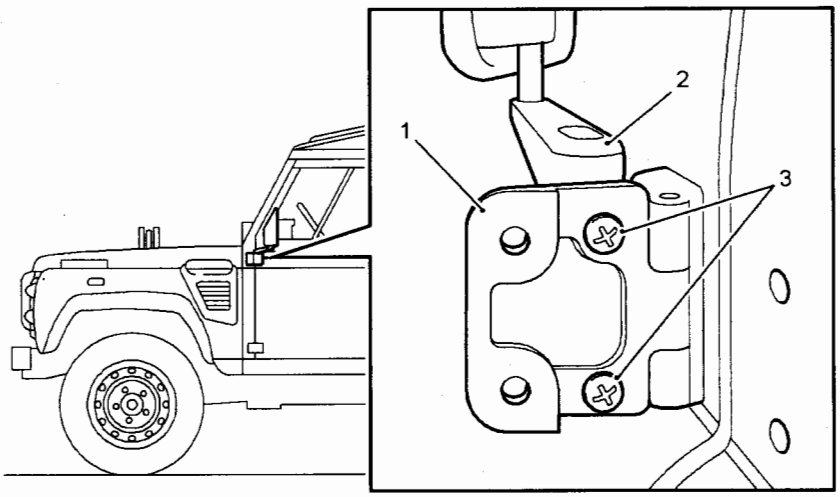

MHB1090

Fig 30 Mirror removal

INFRARED LAMP ADJUSTMENT

WARNING

DO NOT VIEW THE FRONT LAMPS DIRECTLY WITH OPTICAL INSTRUMENTS. IT MAY CAUSE EYE DAMAGE. NIGHT VISION DEVICES MAY BE DAMAGED.

90 Heavy loads may compress the rears suspension. Adjust the angle of the front lamp bodies (Fig 31 (2)) and shrouds (1) to suit conditions.

NOTE

The front lamps are designed to illuminate the local area only, use the shroud to define the top of the beam.

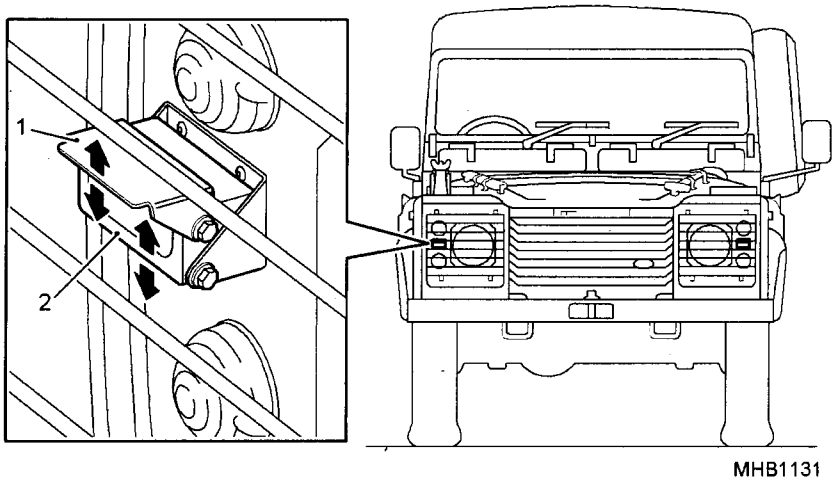

Fig 31 Infrared lamp adjustment

CHAPTER 3-2

FITTED FOR RADIO

CONTENTS

Para

1 Introduction
2 Auxiliary terminals
3 To use the terminals
6 Aerial coaxial stowage
9 Radio aerial mounting base
11 Radio aerial outlet
12 Hard top vehicles
13 Soft top vehicles
14 Battery isolation switch and power import/export system
15 Relay box and circuit breakers
16 Power import/export socket
17 Battery isolation switch

Fig		Page
1	Auxiliary terminal operation	2
2	Aerial coaxial stowage	3
3	Radio aerial mounting base and outlet	4
4	Radio aerial outlets	5
5	Relay box and circuit breakers	6
6	Power import/export socket	8
7	Battery isolation switch	9/10

INTRODUCTION

1 This Sub-Chapter describes operating instructions applicable to the Fitted For Radio (FFR) TUL and TUM vehicles.

AUXILIARY TERMINALS

2 The terminal box (Fig 1 (2)) is attached to the bulkhead behind the left hand seat. The auxiliary terminals on the top of the box are for supplying power to the radio and auxiliary equipment, from the batteries stored under the table. The socket (1) on the side of the terminal box connects the batteries to the vehicle charging circuit and the auxiliary terminals.

To use the terminals

3 Slacken the wing nuts (3) securing the keeper plate.

4 Connect the leads to the terminals (4) ensuring the correct polarity is observed i.e. red positive and black negative.

5 Re-position the keeper plate to cover the terminals and tighten the wing nuts.

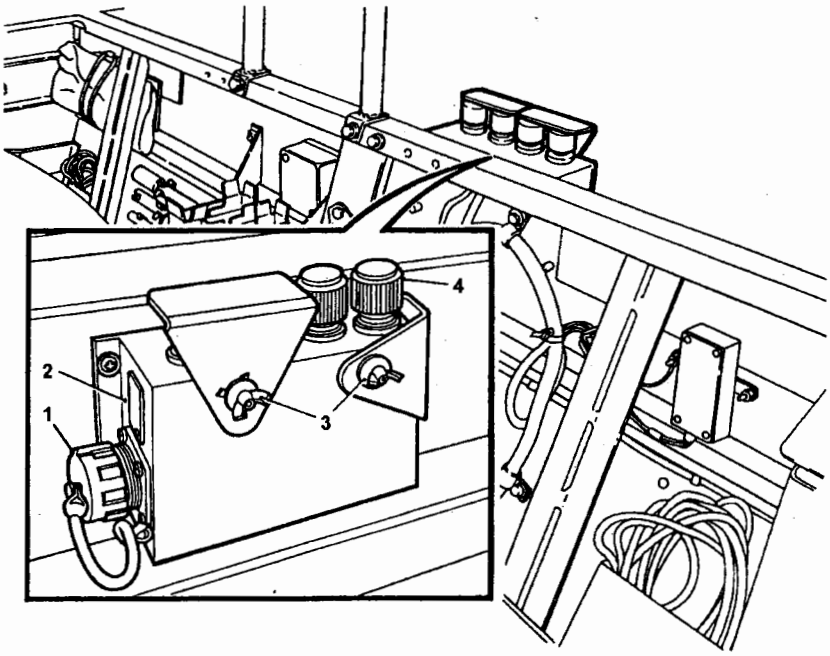

MHB0061

Fig 1 Auxiliary terminal operation

AERIAL COAXIAL STOWAGE

6 Two stowage compartments (Fig 2 (1)), one on each wing top, are provided for the stowage of coaxial cable (2) for radio installations.

7 To gain access, locate the hinged cover (3) at the side of the stowage box and pull, this will release the cover.

8 Pull the coaxial aerials out and position them through the opening in the top of the stowage box cover and close. This allows the stowage to be completely closed while still using the aerial tuning units.

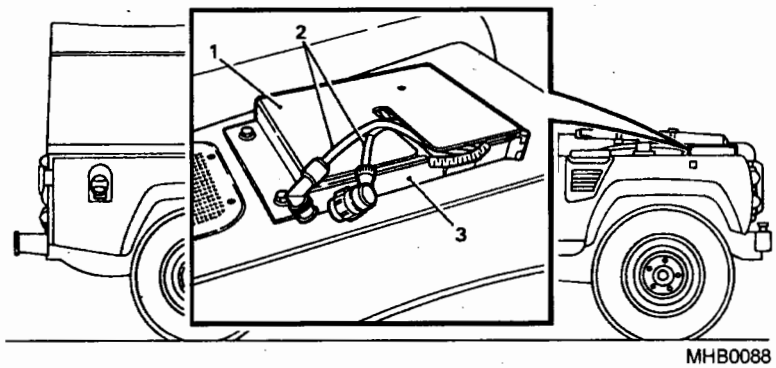

Fig 2 Aerial coaxial stowage

RADIO AERIAL MOUNTING BASE

9 The radio aerial mounting base (Fig 3 (1)) is located on the side of the vehicles and is used for mounting the radio aerials.

10 Both radio aerial mounting bases on either side of the vehicle body can be removed by undoing the elongated captive hexagonal headed bolt and lifting the mounting from its aerial mounting bracket socket. A hole in the head of the bolt is provided to accept a tommy bar.

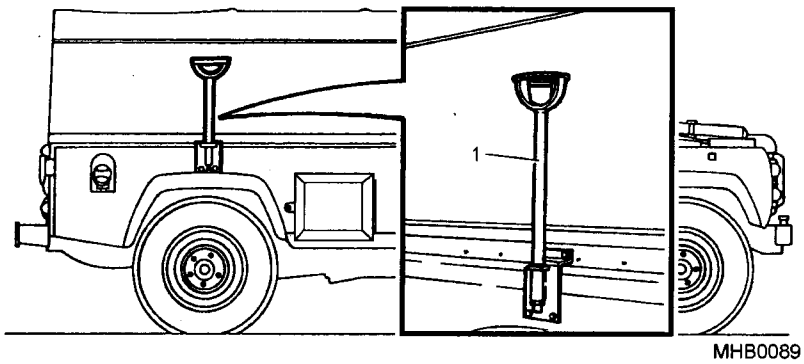

Fig 3 Radio aerial mounting base

RADIO AERIAL OUTLETS

11 The aerial outlets (Fig 4) are positioned on the sides of the vehicle body at the rear. There are two variants, one for hard top vehicles and one for soft top vehicles.

Hard top vehicles

12 The aerial outlet is covered by a swivel plate when not in use. Its purpose is to connect the external aerial to the radio pack inside the vehicle.

Soft top vehicles

13 A flap, integral with the hood covers the aerial outlet, when not in use. Its purpose is to connect the external aerial to the radio pack inside the vehicle.

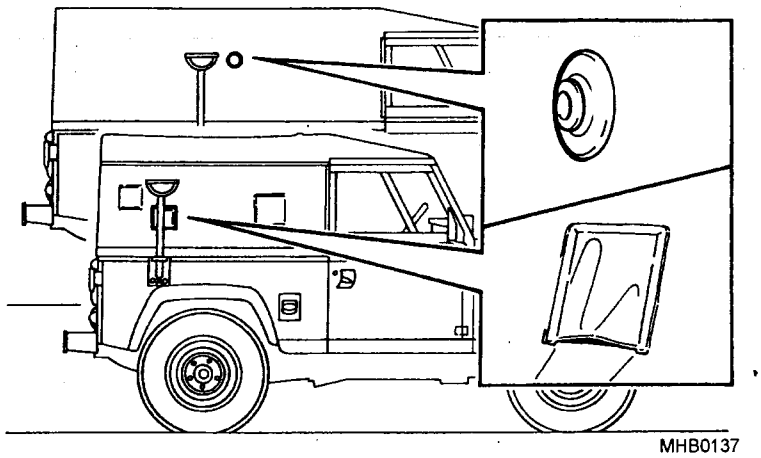

Fig 4 Radio aerial outlets

BATTERY ISOLATION SWITCH AND POWER IMPORT/EXPORT SYSTEM

14 The battery isolation switch and power import/export system is operated as follows:

Relay box and circuit breakers

15 The relay box contains two circuit breakers (Fig 5 (1)) to protect the auxiliary screw terminals (100A) and the power export socket (40A) circuits.

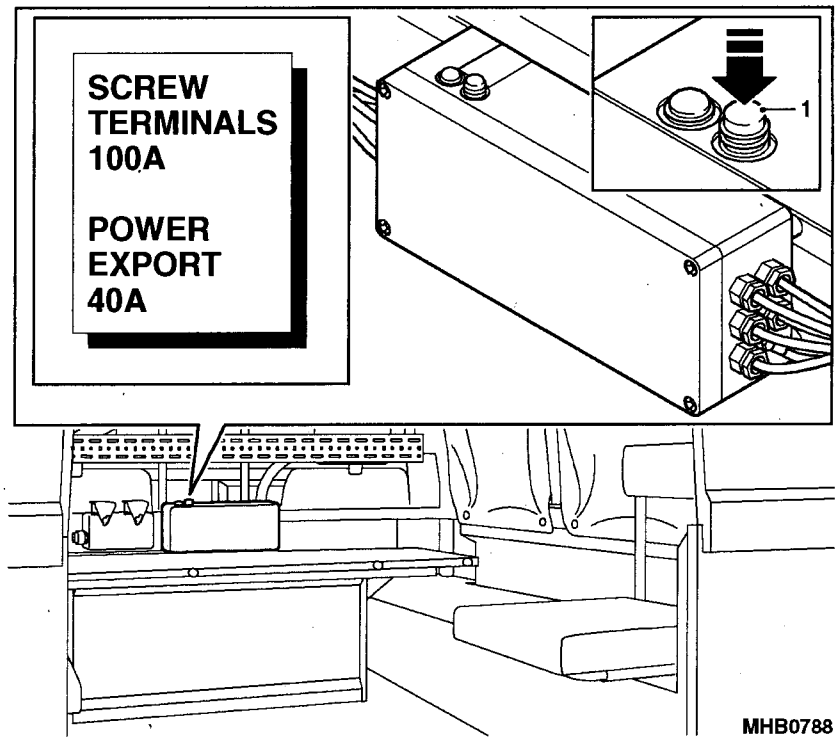

Fig 5 Relay box and circuit breakers

15.1 A circuit breaker protects electrical equipment against the effects of excess current.

15.2 If a circuit breaker trips out due to an electrical fault, reset the circuit breaker by pressing the button (1).

WARNING

ALWAYS RECTIFY THE CAUSE OF A FAILURE BEFORE RESETTING THE CIRCUIT BREAKER. SEEK QUALIFIED ASSISTANCE IF NECESSARY.

Power import/export socket

16 The power import/export socket (Fig 6) is provided to allow power to be imported from an external generator or exported from the vehicle charging circuit.

WARNING

(1) BEFORE CONNECTION ENSURE ANY AUXILIARY EQUIPMENT TO BE SUPPLIED WITH EXPORTED POWER IS OF THE CORRECT VOLTAGE.

(2) BEFORE CONNECTION ENSURE ANY EXTERNAL POWER SUPPLY TO BE CONNECTED IS OF THE CORRECT VOLTAGE.

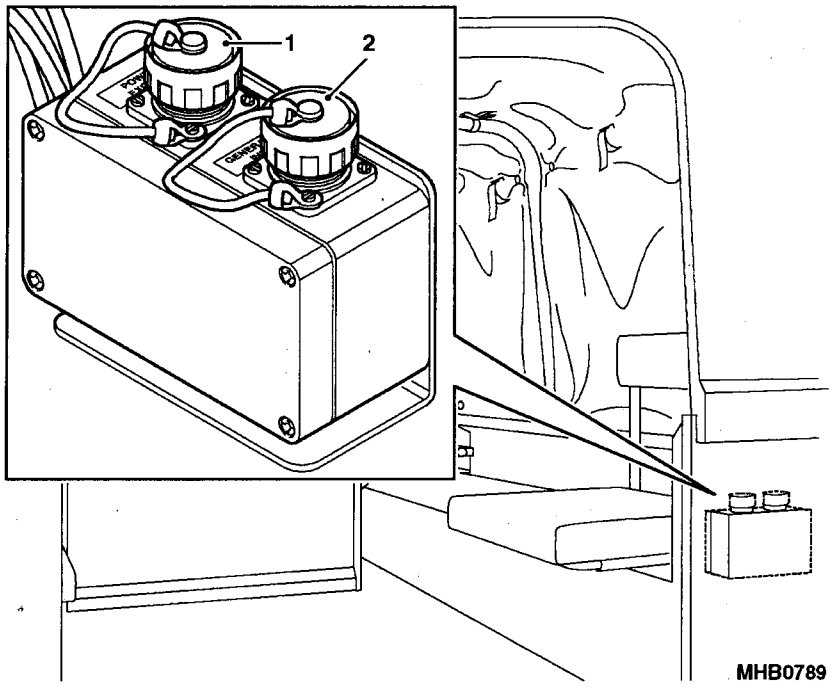

Fig 6 Power import/export socket

16.1 To connect for power export, remove the cap (1) and plug in the power cable to the socket.

16.2 To connect to an external power source, remove the cap (2) and plug in the external power cable to the socket.

16.3 After use always replace the power socket cap.

Battery isolation switch

17 The battery isolation switch (Fig 7) is provided so that power to both the auxiliary screw terminals and the export socket can be disconnected quickly in the event of an emergency or for maintenance.

17.1 To operate the isolation switch, press the button (1), this will cut the power to the circuit breakers on the relay box and isolate the auxiliary screw terminals and the power export socket.

17.2 To restore power, reset the isolation switch by twisting and pulling the button (1).

17.3 Reset the circuit breakers on the relay box (refer to Para 15).

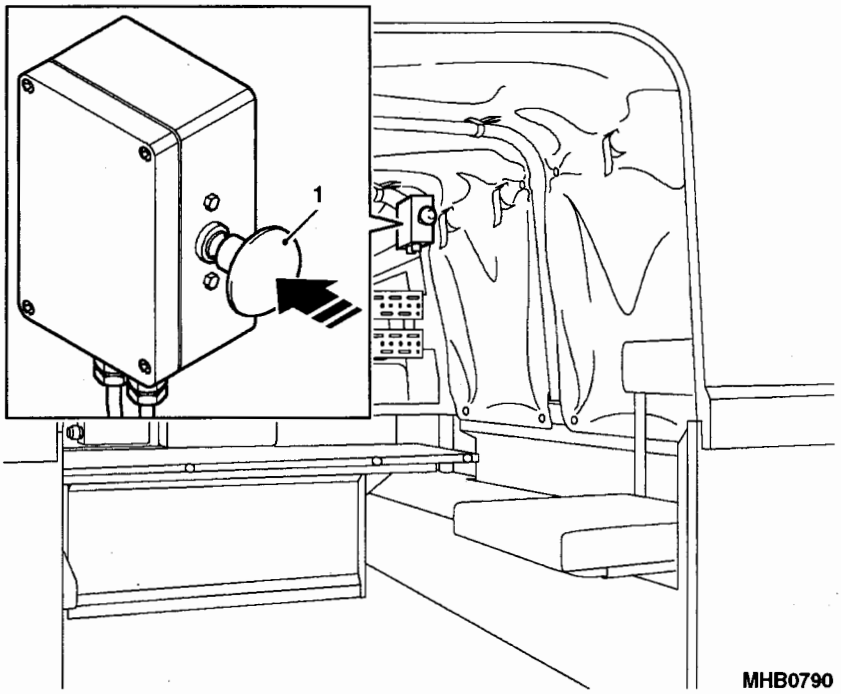

Fig 7 Battery isolation switch

CHAPTER 3-3

AMBULANCE

CONTENTS

Para

1 Introduction
2 Jerry can stowage
3 Stretcher supports
4 Stretcher loading - lower support frames
5 Stretcher loading - upper support frames
6 Upper stretcher support strut
7 Stretcher wedges
8 Change of role
9 Stowing upper support frames
To stow upper support frame
10 Seats
11 Unfolding upper support frames
12 Attendants seat
15 Compartment windows
16 Blackout conditions
17 Emergency usage
18 Rear step
19 Unfolding the step
20 Folding the step
21 Transportation by air
23 Tyre pressures

Table Page

1 Pressure for Goodyear G90 tyres 13/14

Fig

1 Jerry can stowage 2
2 Stretcher loading - lower support frames 3
3 Stretcher loading - upper support frames 4
4 Upper stretcher support strut 6
5 Upper stretcher support frame locking mechanisms 7
6 Passenger seats 8

(continued)

CONTENTS (continued)

7 Attendants seat operation 10
8 Blackout blinds 11
9 Rear step 12

INTRODUCTION

1 This sub-chapter gives the operating instructions applicable to the (TUM) Ambulance HS.

JERRY CAN STOWAGE

2 There are two stowage facilities, one on either side of the vehicle. The left side stowage holds a water jerry can, while the right side holds a fuel jerry can.

2.1 Access is gained by operating the latch and swinging open the retaining bar (Fig 1).

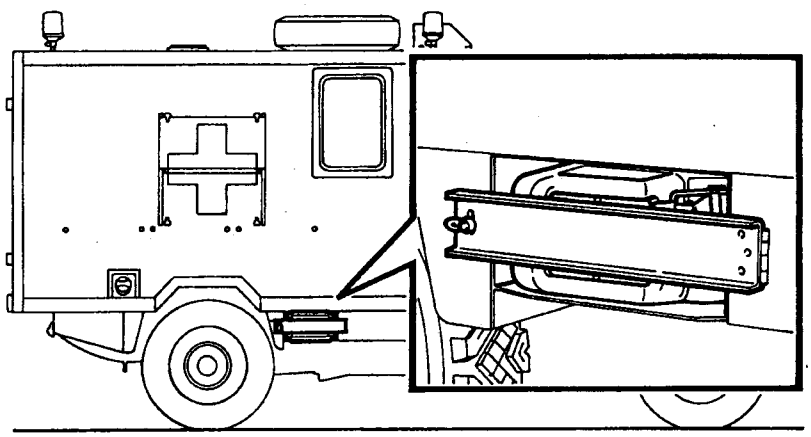

Fig 1 Jerry can stowage

STRETCHER SUPPORTS

3 There are four stretcher support frames, two lower frames and two upper frames.

Stretcher loading - lower support frames

4 Load a stretcher into one of the lower support frames (Fig 2 (2)) as follows:

4.1 Open the rear doors of the vehicle (Refer to Chap 2-3, Para 7).

4.2 Release the shoot bolt (1).

4.3 Pull the stretcher frame rearwards out of the vehicle as far as possible.

4.4 Carefully place stretcher, with casualty, onto the support frame - Guide the feet of the stretcher, sliding them into the rails on the support frame.

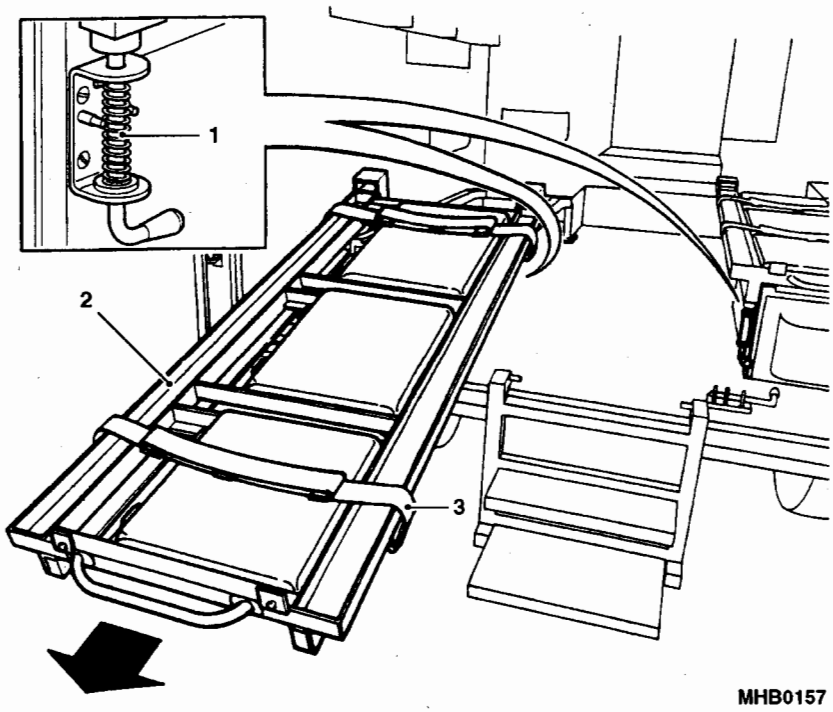

Fig 2 Stretcher loading - lower support frames

4.5 Secure the stretcher and patient to the support frame using the restraining straps (3).

4.6 Slide stretcher and support frame into ambulance compartment.

4.7 Operate shoot bolt (1) to lock the support frame in position.

4.8 Close the rear doors of the vehicle (refer to Chap 2-3, Para 7).

4.9 Stretcher loading - upper support frames

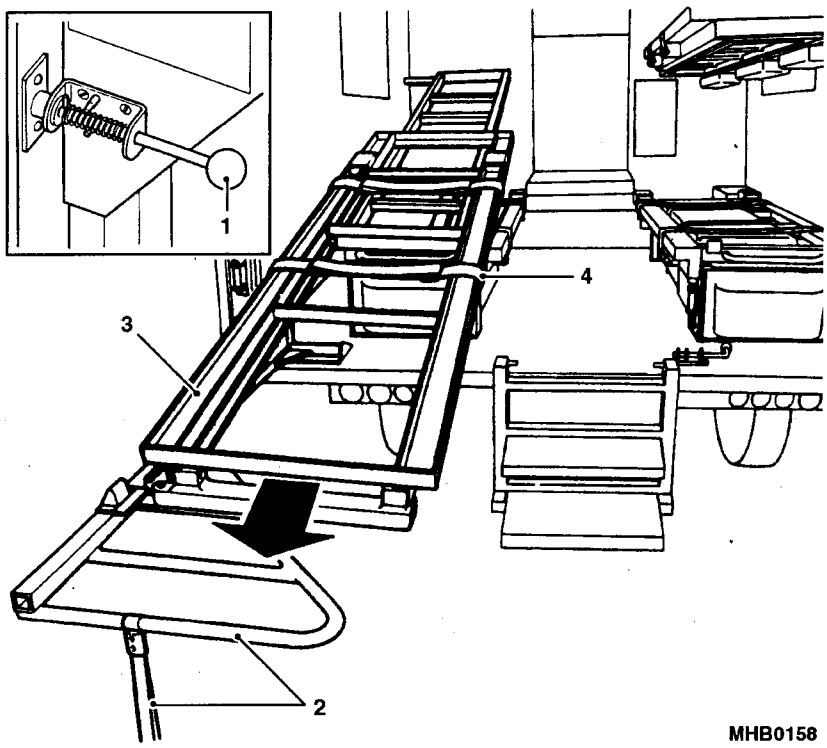

Fig 3 Stretcher loading - upper support frames

Stretcher loading - upper support frames

5 Load a stretcher into one of the upper support frames as follows:

5.1 Open the rear doors of the vehicle (Refer to Chap 2-3, Para 7).

5.2 Release the spring-loaded locking pin from the gate at the rear of the stretcher support frame (Fig 3 (1)).

5.3 Using two hands, pull the gate rearwards using the bars (2) provided.

5.4 Move the gate and stretcher support frame assembly (3) rearwards and downwards to its lowest point where it will automatically lock.

5.5 Carefully place stretcher, with casualty, onto the support frame - Guide the feet of the stretcher, sliding them into the rails on the support frame.

5.6 Secure the stretcher and patient to the support frame using the restraint straps (4).

5.7 Using two hands, lift and push the gate and stretcher assembly up into the ambulance compartment.

5.8 Secure the gate at the rear of the stretcher support frame using the spring-loaded locking-pin (1).

5.9 Secure support strut (refer to Para 6).

5.10 Close the rear doors of the vehicle. (Refer to Chap 2-3, Para 7).

UPPER STRETCHER SUPPORT STRUT

6 A support strut is stowed on the upper stretcher frame which can be used to stabilise the upper stretcher and enhance patient comfort whilst the vehicle is moving. Before the strut can be fixed into position the upper stretcher mechanism must be locked into its operational position. To operate and remove the strut carryout the following:

6.1 Operate. Unclip the end of the strut from its stowed position on the upper stretcher frame.

6.2 Locate the free end of the strut (Fig 4 (1)) into the bracket (2) on the lower stretcher frame.

6.3 Tighten the twist grip (3) to lock the strut in position.

6.4 Locate the safety pin (4) into the locked position.

6.5 Removal. Remove the safety pin and stow.

6.6 Unscrew the grip to release the strut from the lower stretcher frame.

6.7 Swing free end of the strut upwards and locate in the clip mounted on the clip mounted on the upper stretcher frame.

6.8 Unlock and lower upper stretcher mechanism.

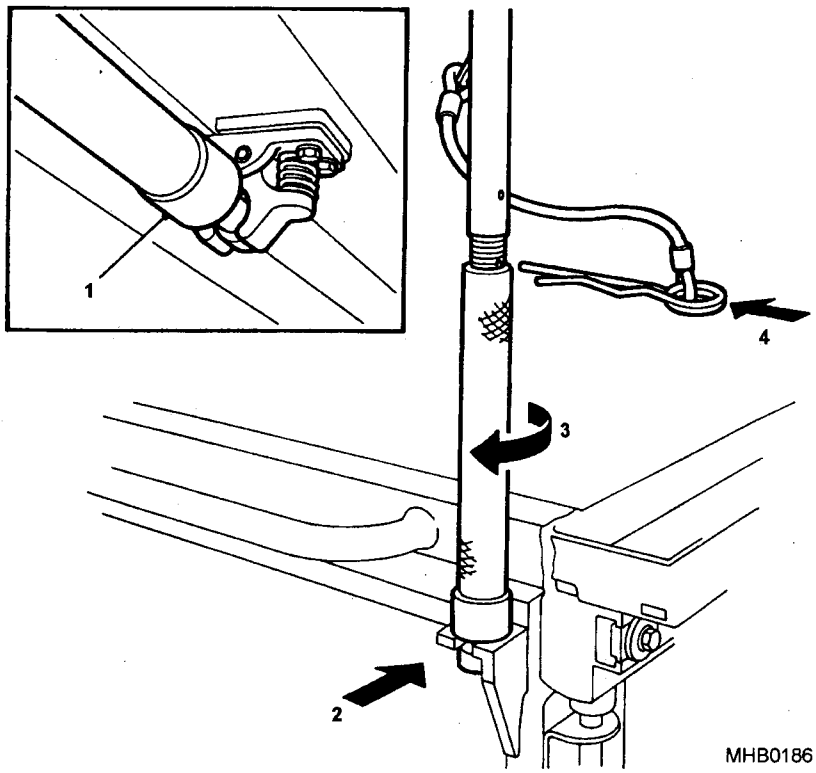

Fig 4 Upper stretcher support strut

CHANGE OF ROLE

7 When required, the upper stretcher support frames can be stowed as follows:

Stowing upper support frames

8 Before stowing upper support frames the stretchers must be stowed away.

8.1 Remove stretchers from all support frames.

8.2 Fold each stretcher.

8.3 Using restraint straps, secure stretchers (Fig 5 (2)) to the side of the compartment (two stretchers on each support frame).

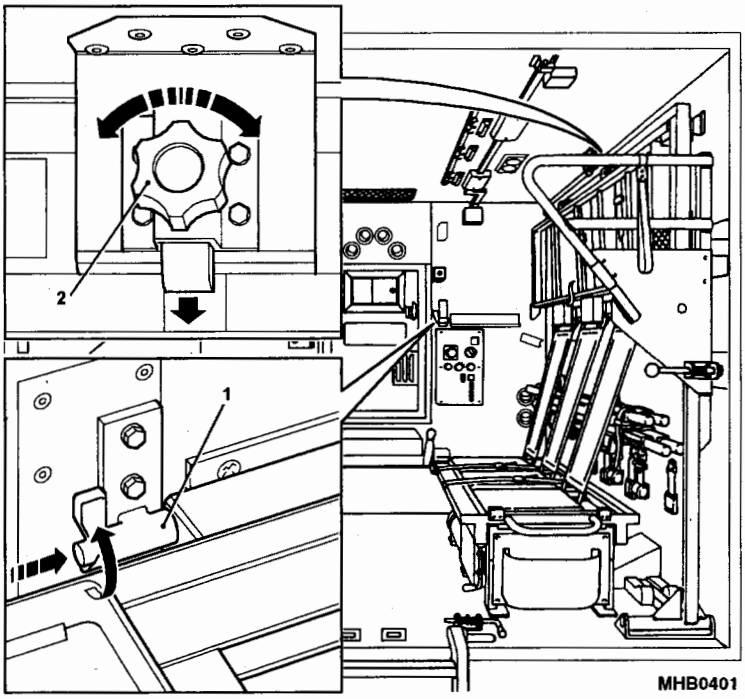

Fig 5 Upper stretcher support frame locking mechanisms

8.4 Release the locking-pin (Fig 5 (1)) at the front of the support frame.

8.5 Push the support frame fully up to its stowed position against the ambulance compartment wall.

8.6 Secure the support frame in the stowed position by engaging the support frame with the spring-loaded catch (2) on the ambulance compartment wall. Tighten catch and lock.

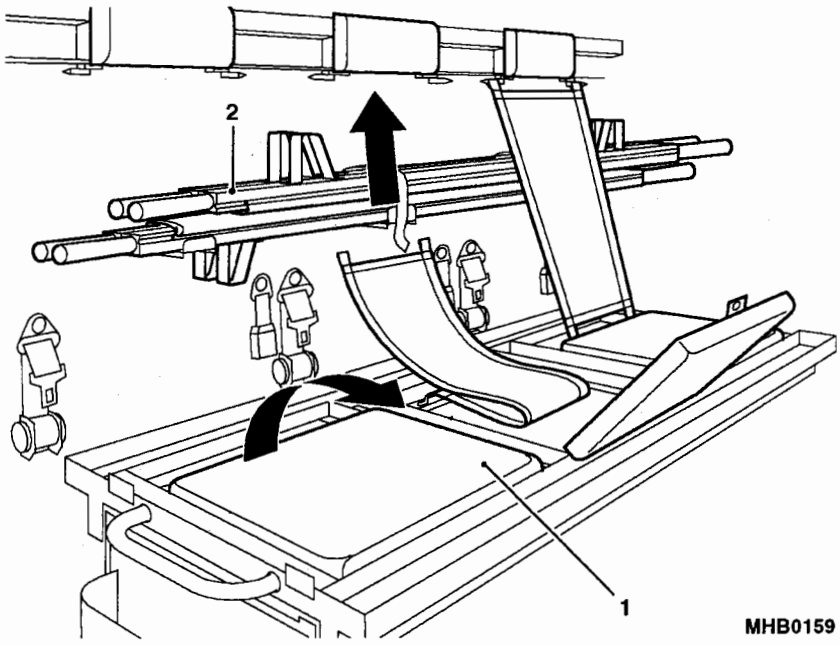

Fig 6 Passenger seats

Passenger seats

9 To utilise each of the six seats proceed as follows:

9.1 Stow away the upper support frame (Para 8.4).

9.2 From under the seat slabs (Fig 6 (1)) remove the back supports and secure to the underside of the head pads.

9.3 To stow the back supports reverse the above procedure (Para 9.2).

9.4 Check that lap straps are fully retracted.

Unfolding upper support frames

10 Unfold each upper frame from its stowed position as follows:

10.1 Stow the seats as previously described.

10.2 Release the spring-loaded catch securing the support frame to the ambulance compartment wall.

10.3 Hinge the support frame down to a horizontal position.

10.4 Engage the locking-pin at the front of the support frame.

ATTENDANTS SEAT

11 An attendants seat (Fig 7) is located against the bulkhead. The seat lifts up providing access to storage space underneath it. The space is used for the storage of equipment and kit.

11.1 A two-point lap belt for use by the attendant is fitted to the bulkhead.

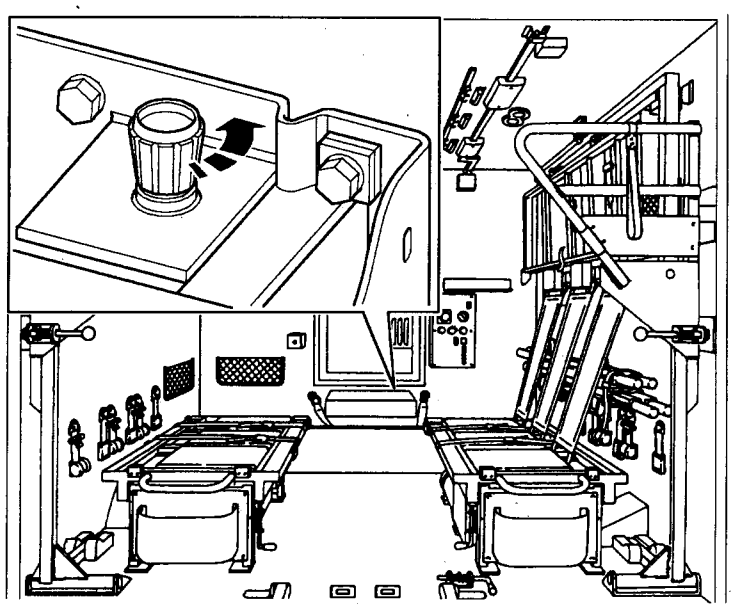

MHB0288

Fig 7 Attendants seat operation

12 A locking device retains the seat in the sitting position. To lift the seat, turn the knob located at the rear of the seat cushion anti-clockwise and the seat base will raise automatically.

13 To return the seat to the sitting position, push the seat base down until the locking device clicks into position.

COMPARTMENT WINDOWS

14 On each side of the compartment, a single tinted glass window allows the passage of daylight and provides a means of emergency egress.

Blackout conditions

15 The window frame is surrounded with velcro strip (Fig 8). This allows the attachment of a roll down, light-proof panel when black-out conditions exist.

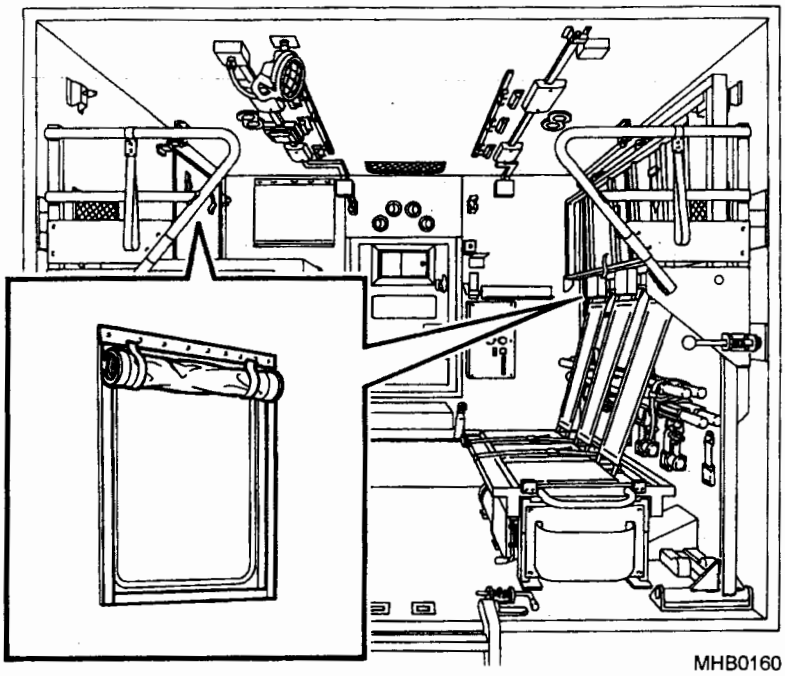

Fig 8 Blackout blinds

Emergency usage

16 Each window comprises a single pane of tinted glass set in a rubber glazing/sealing strip. A pull-ring is attached to the sealing strip at the top of the window. In an emergency, operation of the pull-ring causes the sealing strip to be removed and the window pane can be booted from the vehicle.

REAR STEP

17 The rear step (Fig 9) when not in use is stowed away on the compartment floor secured by a shoot bolt.

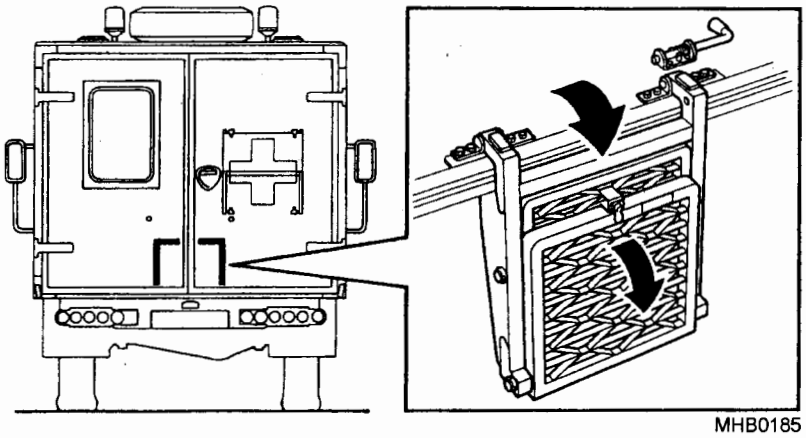

Fig 9 Rear step

Unfolding the step

18 To unfold the step proceed as follows:

18.1 Release the step from the shoot bolt.

18.2 Lower the step to the vertical position.

18.3 Undo the retaining catch and lower the steps.

Folding the step

19 To fold the step away, proceed as follows:

19.1 Fold up the steps ensuring that the lower step is locked into place.

19.2 Lift the steps and fold onto the compartment floor ensuring that it is secured with the shoot bolt.

TRANSPORTATION BY AIR

20 When transporting the vehicle by air the following items must be removed from the roof before the vehicle is loaded onto the transport aircraft:

20.1 Spare wheel

20.2 Blue flashing beacons

20.3 Mk 5 concealment kit

21 These items must be removed to avoid the possibility of damage to the items and/or the transport aircraft.

TYRE PRESSURES

22 Emergency soft pressure should only be used in extreme conditions. When emergency pressures are used a maximum speed of 25 mph (40 kph) should not be exceeded. Pressures should be returned to normal immediately firm ground is regained.

TABLE 1 PRESSURE FOR GOODYEAR G90 TYRES

Serial (1)	Vehicle (2)	Normal (3)		Emergency Unladen (4)		Emergency Laden (5)	
		Bar	lb/in^2	Bar	lb/in^2	Bar	lb/in^2
1	BFA front wheels	2.8	40	1.1	16	1.1	16
2	BFA rear wheels	4.6	65	1.1	16	1.6	23

CHAPTER 3-4

WINTER/WATER

CONTENTS

Para

1 Introduction
2 Soft top escape aperture
4 Hard top escape aperture
5 Vehicle blinds
6 Windscreen blind
7 Side door blinds
8 Rear door blind
9 Radiator blind
10 Filler flap
12 Radiator taps

Fig		Page
1	Retaining the hood	3
2	Vehicle blinds	5
3	Filler flap	6
4	Radiator taps	7/8

INTRODUCTION

1 This sub-chapter describes all the items applicable to Truck Utility Light (TUL) HS and Truck Utility Medium (TUM) HS Winter/water vehicles which are not covered in the previous chapters.

SOFT TOP ESCAPE APERTURE

2 To open the escape aperture:

2.1 From inside the vehicle, release the lining support straps from the cam lock buckles on top of the windscreen surround.

2.2 Stow the straps.

2.3 Release the velcro strips securing the drivers cab lining only and remove the lining from the vehicle.

2.4 Fold and stow the lining in the rear side of the vehicle between the rear compartment lining and the soft top.

2.5 Unzip the soft top but not fully, stop just short of the top right hand drain channel (Fig 1 (1)).

2.6 Roll the soft top from the left hand corner (4).

2.7 Using straps supplied from the Stage B kit (refer to Cat 421 instruction No 1), pass strap through farthest right hand windscreen buckle (2) and reroute back through the cam lock buckle (5).

2.8 Pass the other end of the strap (3) over the rolled hood and into the vehicle and hook over the windscreen cant rail on the right hand side of the right hand sun visor.

2.9 Pull the strap (6) through the cam lock buckle (5) to secure the soft top rail and maintain escape aperture.

3 To close the escape aperture:

3.1 Release the cam lock buckle and inside the vehicle unhook the strap from the windscreen cant rail.

3.2 Pull the other end of the strap through the cam lock buckle and release from the right hand windscreen buckle.

3.3 Stow the strap.

3.4 Unroll soft top and close zip.

3.5 Refit lining to drivers cab and secure with velcro strips and straps.

HARD TOP ESCAPE HATCH

4 To open the escape hatch:

4.1 From inside the vehicle, release the seven straps and remove the escape hatch.

4.2 Using the straps secure the hatch to the roll over cage in the rear body.

4.3 Ensure that any items stowed on the roof do not obstruct free movement through the hatch.

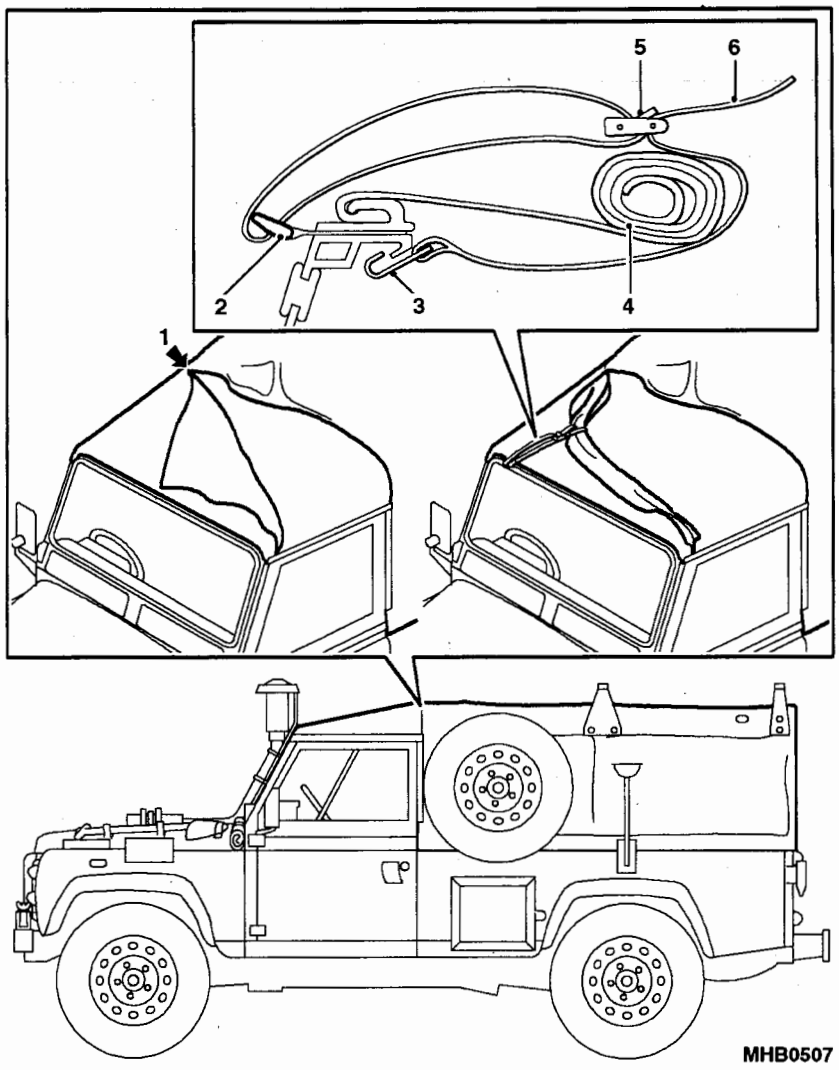

Fig 1 Retaining the hood

VEHICLE BLINDS

5 There are five parts to the vehicle blinds (Fig 2).

Windscreen blind

6 To fit the blind:

6.1 Place the blind (2) on the windscreen and attach the four top straps to the cleats above the windscreen.

6.2 Open the doors and fit the two flaps over the "A" posts and shut the doors ensuring security of the flaps.

6.3 To remove, reverse the above procedure.

Side door blinds

7 To fit the blinds (4).

7.1 Open the side doors.

7.2 Place the blinds over the doors and pull down over the side windows.

7.3 To remove, reverse the above procedure.

Rear door blind

8 To fit the blind (1).

8.1 Open the rear door.

8.2 Place the blind over the door and pull down over the rear window.

8.3 Fold the flap into the door and close door ensuring security of flap.

8.4 To remove, reverse the above procedure.

Radiator blind

9 To fit the radiator blind (3).

9.1 Open the bonnet.

9.2 Place the blind on the radiator grille and attach the straps to the three cleats above the radiator grille.

9.3 Secure the bottom of the blind to the vehicle.

WARNING

INJURY. TAKE CARE NOT TO TRAP FINGERS WHEN CLOSING BONNET WHEN SECURING RADIATOR BLIND.

9.4 Fold the blind into the top of the engine bay and close bonnet ensuring security of blind.

9.5 To remove, reverse the above procedure.

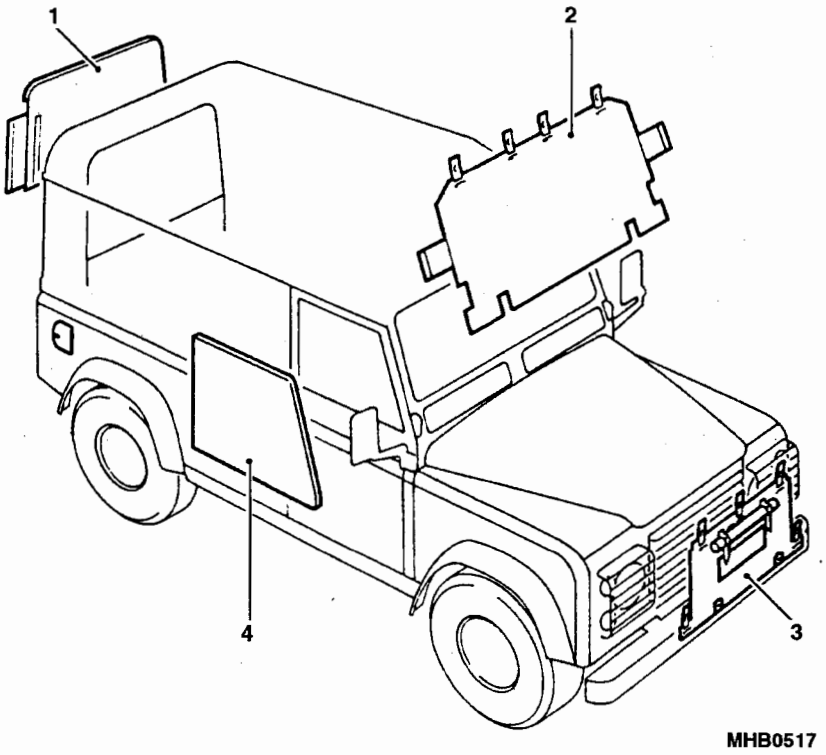

1	Rear door blind	3	Radiator blind
2	Windscreen blind	4	Side door blinds

Fig 2 Vehicle blinds

FILLER FLAP

10 The filler flap protects the filler cap (Fig 3 (2)) from excessive cold and water penetration.

To open and close the flap

NOTE

When fastening the flap (1) ensure that turnbuckle is secure.

11 Twist the turnbuckle in the appropriate direction to release or fasten the flap.

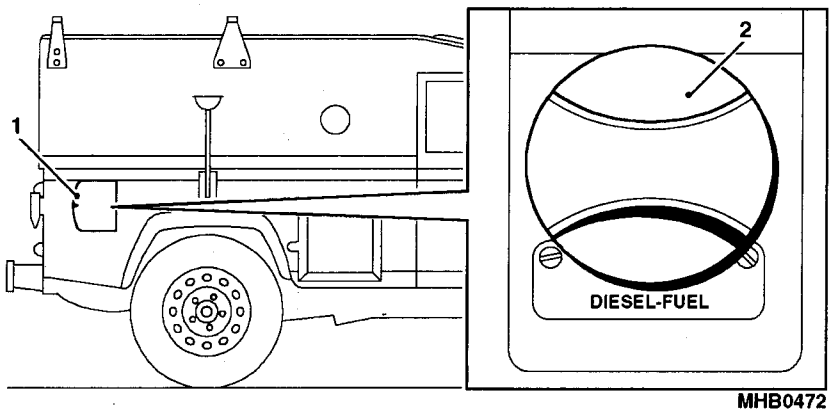

1 Filler flap 2 Filler cap

Fig 3 Filler flap

RADIATOR TAPS

12 There are two radiator taps (Fig 4), one mounted on the heel board for the battery box and the other mounted on the rear bulkhead for the back of the vehicle. These taps control the operation of the radiators especially in milder weather conditions and operate thus:

12.1 With the tap in the horizontal position – radiators are on.

12.2 With the tap in the vertical position – radiators are off.

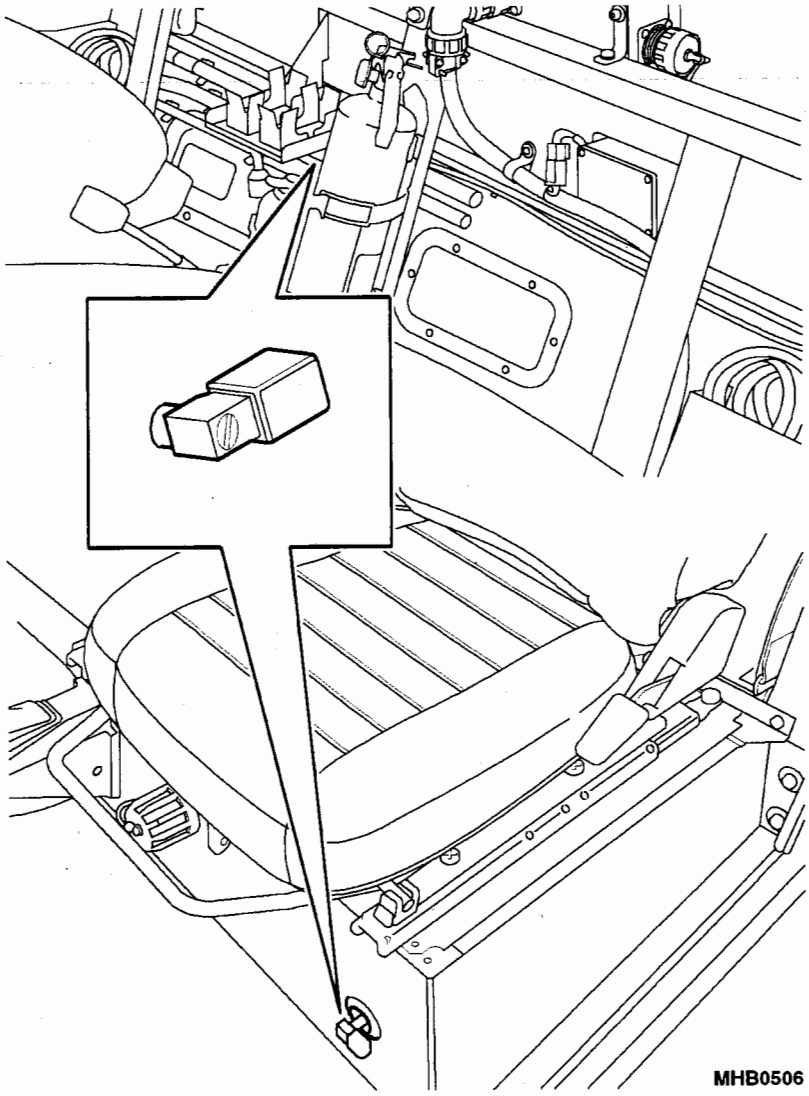

Fig 4 Radiator taps

CHAPTER 3-5

WINTERISED

CONTENTS

Para

1 Introduction
2 General

INTRODUCTION

1 This sub-chapter describes all the items applicable to Truck Utility Light (TUL) HS and Truck Utility Medium (TUM) HS Winterised vehicles which are not covered in the previous chapters.

General

2 All information appertaining to the winterised vehicles can be found in sub-chapter 3-4 Winter/Water.

CHAPTER 3-6

AIR DROP

CONTENTS

Para

1 Introduction
2 Fitting the front roll cage – 1st stage
3 Fitting the front roll cage – 2nd stage

Fig Page

1 Front roll cage and support 2
2 Rear diagonal brace 3

FITTING THE FRONT ROLL CAGE – 1ST STAGE

1 To fit the front roll cage proceed as follows:

NOTE

Roll cage assembly comprises: front roll cage, weapons rack, radio rack and braces.

2 With assistance, locate front roll cage assembly (Fig 1 (1)), in sockets, ensuring weapons rack brackets locate in position at top of bulkhead.

3 Secure with hexagonal head bolts (10 places) but do not tighten.

4 Assemble rear diagonal brace (1) to the lower telescopic tube (5) and mounting bracket attached.

NOTE

Do not fully tighten fixings at this stage.

5 Fix rear brace assembly at mounting point on front roll bar bracket (2).

6 Extend rear telescopic brace (5) and locate the release bolt (6) through both parts.

7 Locate in position on bodyside capping (3) and secure all fittings (4).

8 Fit the seat belts to the roll cage fixing points and tighten.

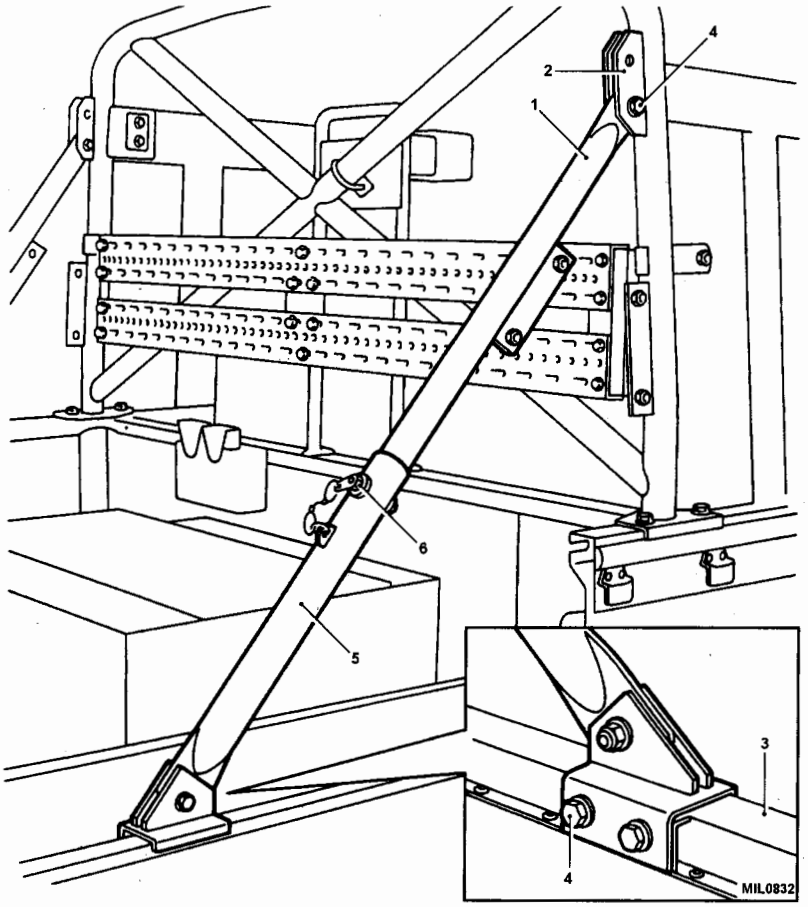

1	Inner brace section	4	Fixings
2	Mounting point	5	Telescopic brace outer
3	Bodyside capping	6	Securing bolt

Fig 1 Front roll cage and support

FITTING THE FRONT ROLL CAGE – 2ND STAGE

9 To fit the front roll cage proceed as follows:

NOTE

Roll cage assembly comprises: front roll cage weapons rack, radio rack and braces.

10 Fit the two rear bodyside sections and secure with the shoot bolts.

11 Fit rear diagonal brace (Fig 2 (1)) as described previously this time using the alternative fixing points on the bodyside section channels (2) and secure with the release bolt (3).

12 Fit the seat belts to the roll cage fixing points and tighten.

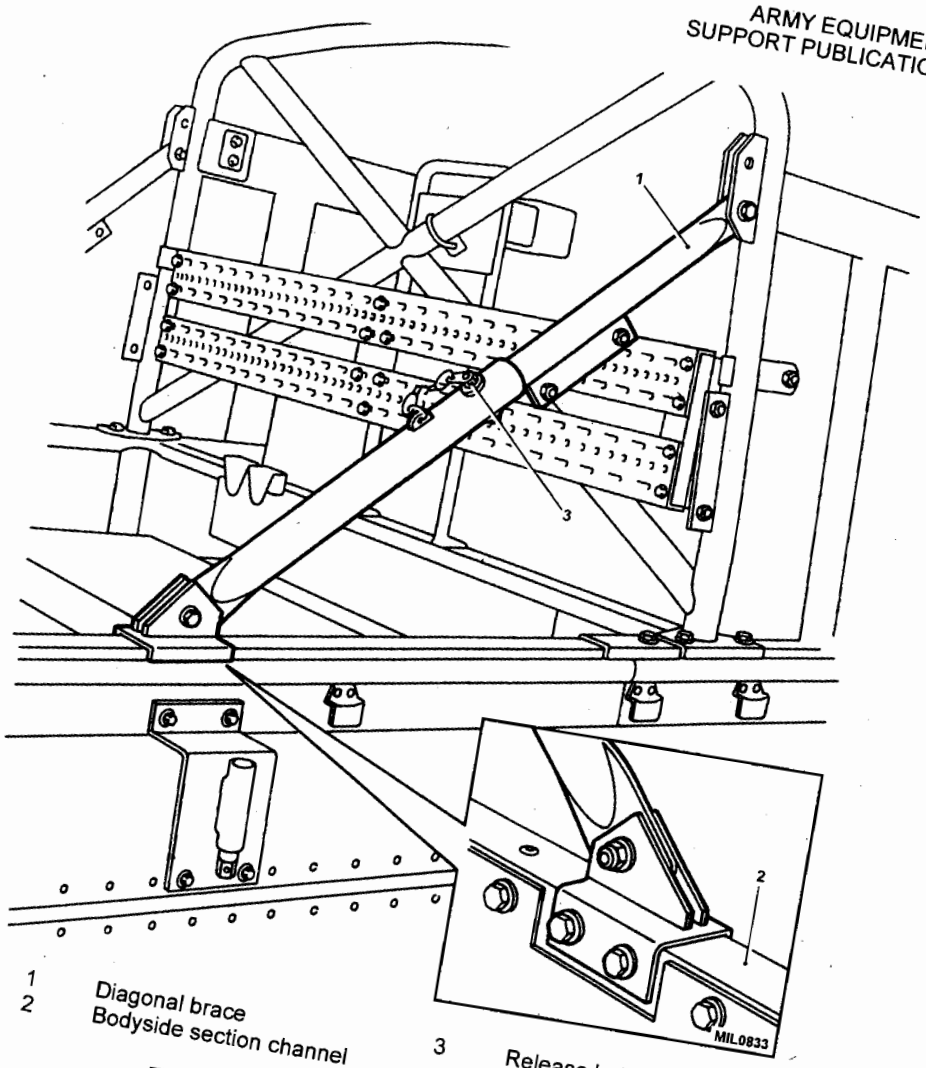

1 Diagonal brace
2 Bodyside section channel
3 Release bolt

Fig 2 Rear diagonal brace and bodyside

CHAPTER 3-7

HELICOPTER SUPPORT PLATFORM

CONTENTS

Para

1 Introduction
2 Safety bars
3 Battery stowage box

Fig

		Page
1	Raising the safety bars	2
2	Battery stowage box	3/4

INTRODUCTION

1 This sub-chapter gives the operating instructions applicable to the Truck Utility Medium (TUM) HS Helicopter support platform.

SAFETY BARS

2 To raise the safety bars carry out the following:

2.1 Remove the locking pin (Fig 1 (3) securing the safety bar (2) in the transportation position on the platform (1).

2.2 Lift the safety bars (2) into the vertical position and secure with the locking pin (3). Ensure the end of the pin (4) is turned through 90° to secure the pin in position.

2.3 Lower the safety bars by removing the locking pin and securing in the transportation position with the locking pin.

2.4 Ensure the safety wires are stowed safely on top of the platform.

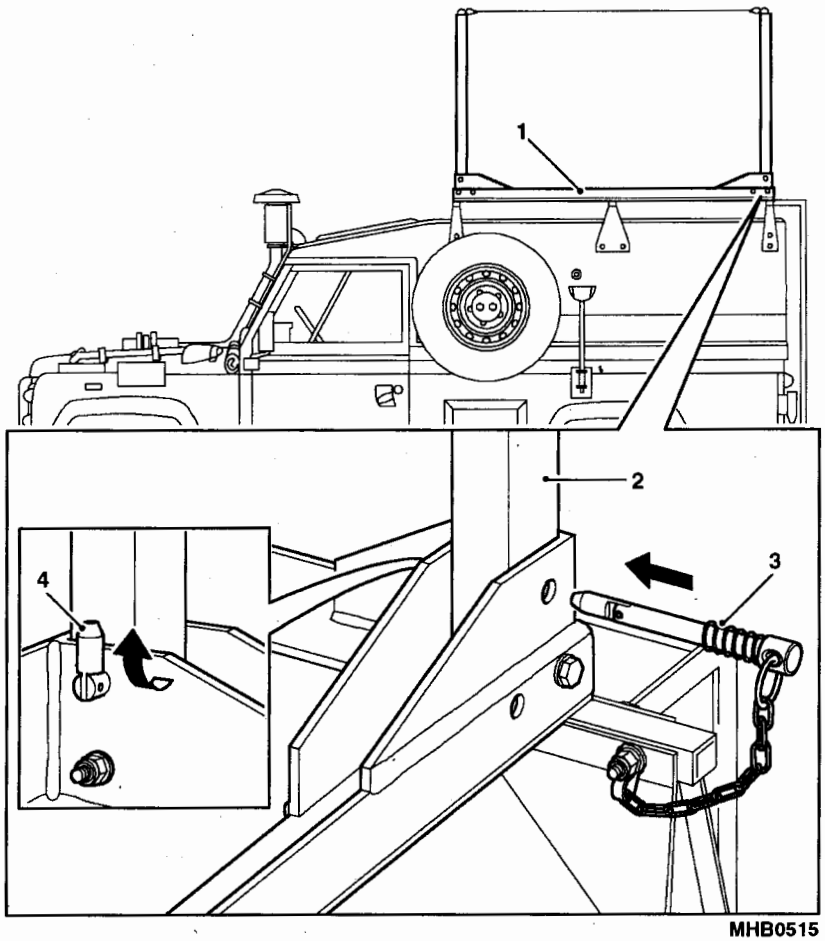

Fig 1 Raising the safety bars

BATTERY STOWAGE BOX

3. A battery stowage box (Fig 2) is located in the rear of the vehicle over the left hand wheel arch. The box is for the stowage of the sealed battery starter system which is used for starting helicopters and other vehicles. The system can be recharged by plugging it into the vehicle charging system via a lead from the terminal box.

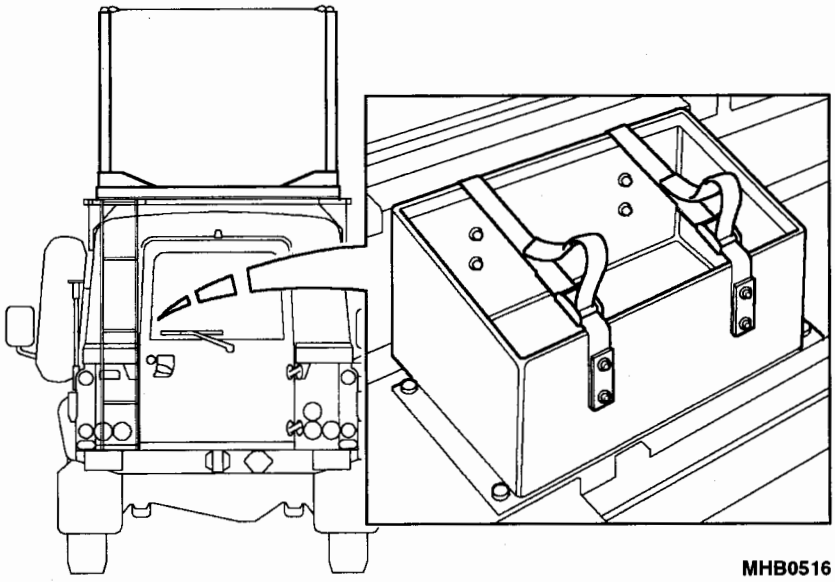

Fig 2 Battery stowage box

CHAPTER 3-8

COMMANDERS IK

CONTENTS

Para

1 Introduction
2 Boiling vessel
3 Residual Current device (RCD)
4 Input socket
5 Socket panel
6 Input/output sock
7 Bed (WARNING)
8 Desk/map board
9 Desk
10 Mapboard
11 Battery cover
12 Document pockets
13 Stowage area
14 Blackout curtain
15 Roof rack and cover (CAUTIONS/16)
18 Earth spike

Fig

		Page
1	Boiling vessel	3
2	Residual current device (RCD)	4
3	Input socket	4
4	Socket panel	5
5	Input output sock	6
6	Bed restraining straps	7
7	Desk	8
8	Map board	9
9	Battery cover	10
10	Document pockets	11
11	Restraining netting	12
12	Blackout curtain	13
13	Roof rack cover	14
14	Earth spike	15/16

INTRODUCTION

1 This sub-chapter gives the operating instructions applicable to the Truck Utility Medium (TUM) HS Commanders IK.

BOILING VESSEL

2 The prime purpose of the boiling vessel is to heat water. The vessel is restrained by a strap which wraps around it and fastens using the buckle (Fig 1 (3))

2.1 Connect the harness to the terminal box via the black and red terminals (1) on top of the box.

2.2 Connect the other into the vessel via the plug (2).

RESIDUAL CURRENT DEVICE (RCD)

3 The residual current device (RCD) (Fig 2) protects the harness system in the rear of the vehicle.

3.1 If the circuit breakers should trip then lift the clear cover and press the switch (2) back into the on position.

3.2 There are individual switches (1) for each of the circuit so that each circuit can be isolated individually.

3.3 Should this happen repeatedly the fault should be investigated and corrected.

INPUT SOCKET

4 The input socket (Fig 3) allows for an outside current supply.

4.1 Undo the cap then inset the plug.

SOCKET PANEL

5 The socket panel (Fig 4) has three different means of connection for various devices.

5.1 Lift the cover (1) from the panel to use the sockets.

5.2 The cover has a velcro strip (2) to attach it to the panel.

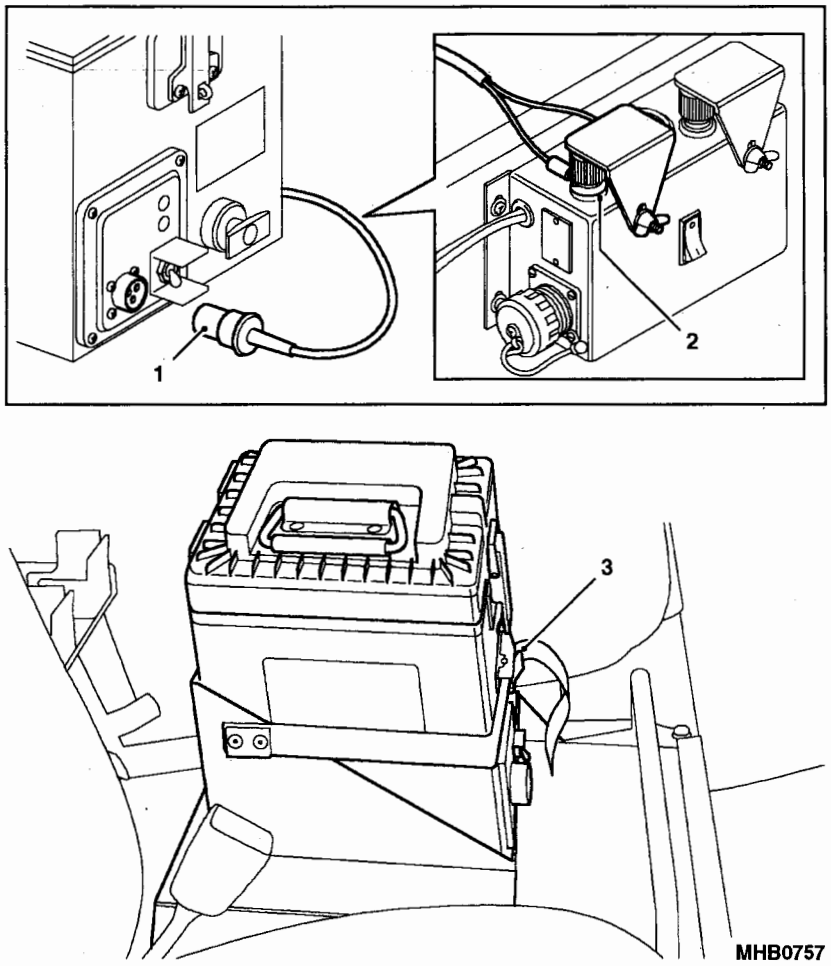

Fig 1 Boiling vessel

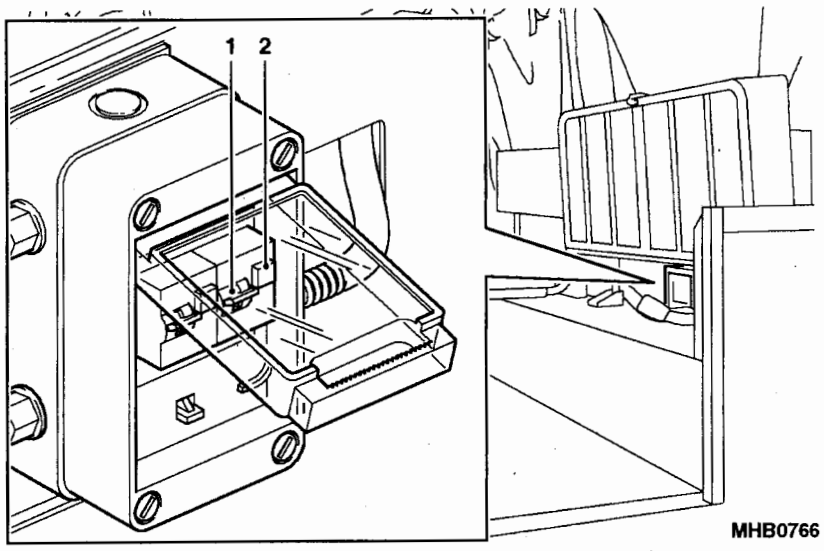

Fig 2 Residual current device (RCD)

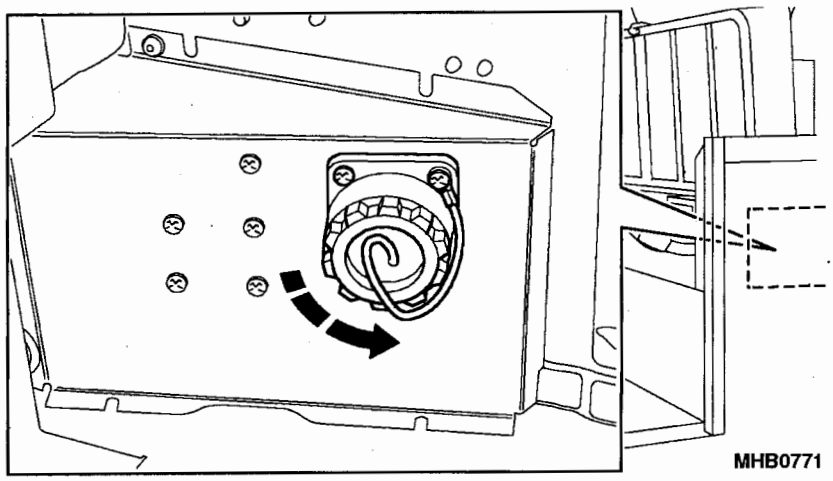

Fig 3 Input socket

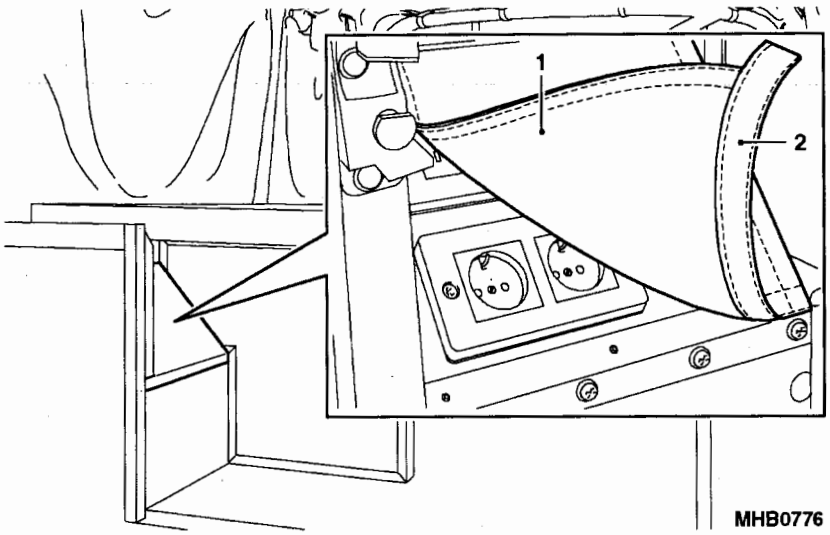

Fig 4 Socket panel

INPUT/OUTPUT SOCK

6 The input/output sock (Fig 5) allows for electrical cables to access the rear of the vehicle. There are two, one on each side of the vehicle.

6.1 Swivel the cover (1) in an upward direction to access the sock.

6.2 Feed the cable(s) into the aperture and secure to the appropriate electrical terminal.

6.3 To ensure that there is no ingress of matter into the vehicle tie the sock around the cable(s) using the draw string.

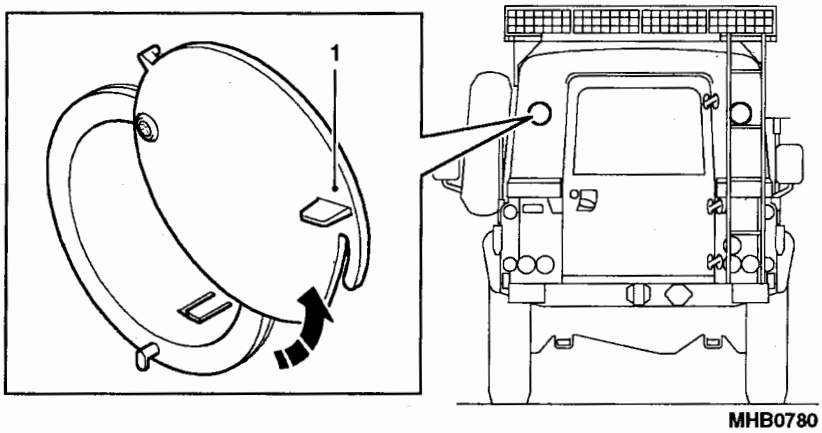

Fig 5 Input/output sock

BED

WARNING

THE BED SHOULD NOT BE USED WHEN THE VEHICLE IS MOVING.

7 The bed (Fig 6 (1)) doubles up as a map board when in the upright position. When the map board mode it is secured using straps (2) mounted in the roof. These same straps are used to restrain the person when using it as a bed.

To lower the bed into the horizontal position release the straps from its catches (3).

DESK/MAPBOARD

8 When the vehicle is in operational mode the bed is in the upright position revealing the desk and map board.

Desk

9 The desk has two clear plastic covers (Fig 7 (1)), which can be lifted out for ease of use.

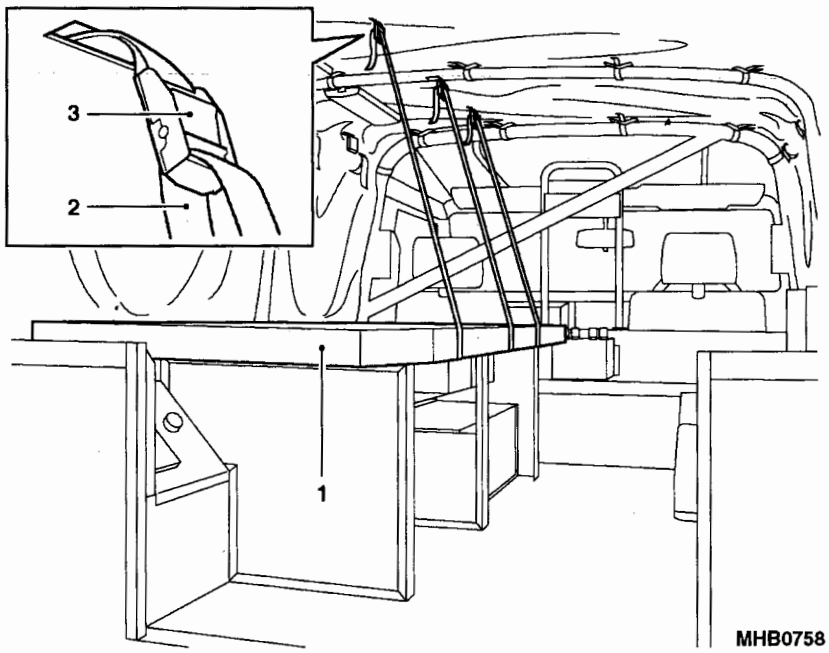

Fig 6 Bed restraining straps

Map board

10 The map board (Fig 8) has two clear plastic sheets, which can be removed so that maps can be placed behind them for the ease of viewing.

10.1 Straps (1) attached to the bed and then secured to the side of the vehicle using catches (2) secure it.

10.2 Release the plastic sheet (4) from the retaining brackets (3).

10.3 Place the map inside and replace the plastic sheet by easing it gently into the retaining brackets.

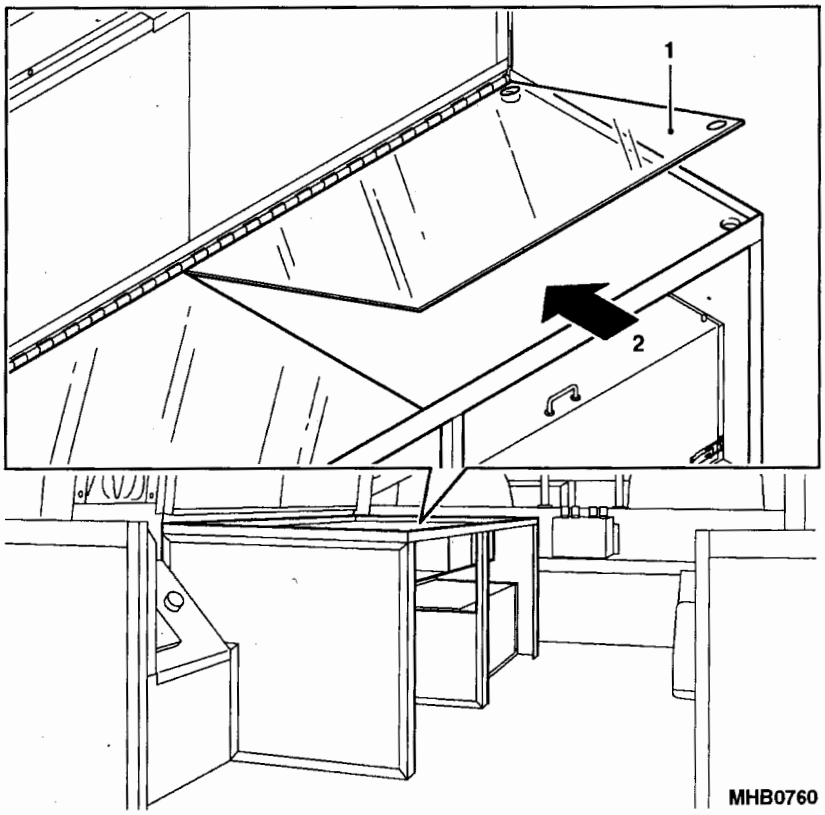

Fig 7 Desk

BATTERY COVER

11 The battery cover (Fig 9) is located towards the front of the vehicle on the left hand side.

11.1 Undo the two overcentre catches (2) at the bottom of the cover (1).

11.2 Remove the cover by sliding it out of its slot, at the rear of the box, in a horizontal position then gently lifting up as well as outwards.

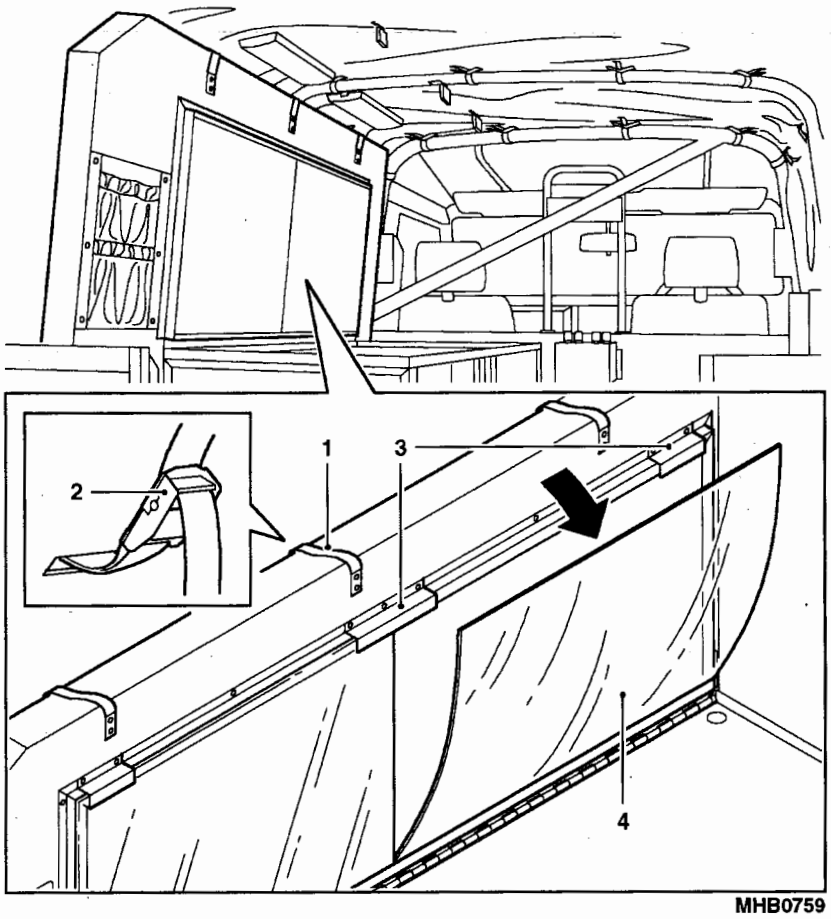

Fig 8 Map board

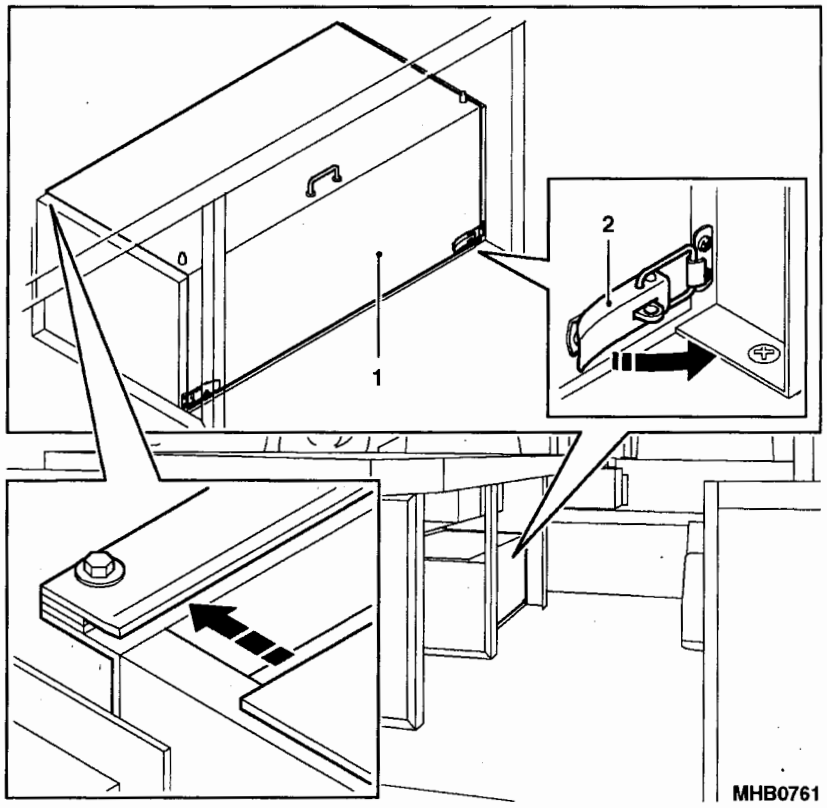

Fig 9 Battery cover

DOCUMENT POCKETS

12 The document pockets (Fig 10) are adjacent to the mapboard and are for various documents while the vehicle is operation.

12.1 The document pockets (1) are elasticated to hold the contents more securely.

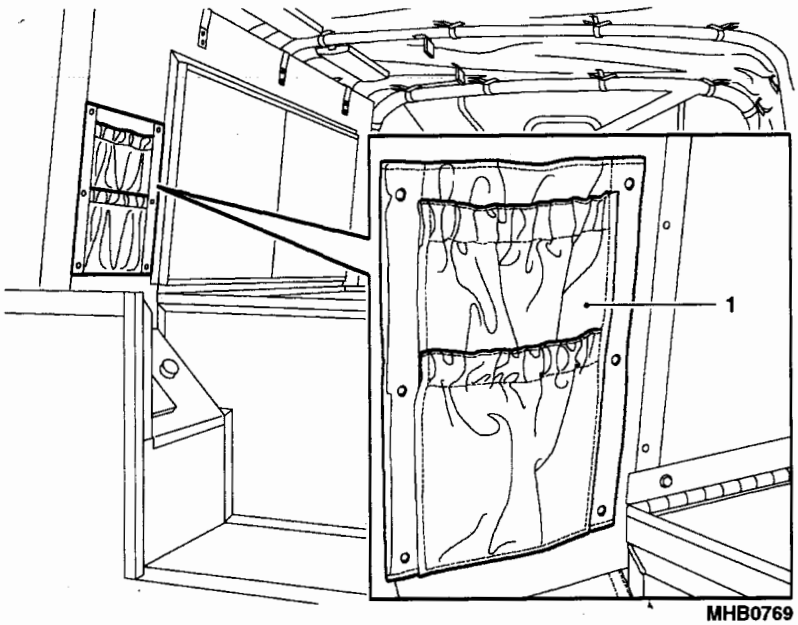

Fig 10 Document pockets

STOWAGE AREA

13 The stowage area is underneath the desk and can be used for a variety of purposes. The blackout curtain is stowed here.

13.1 To release the netting unclip from the hooks (1) positioned around the aperture. The net is secured to the floor of the vehicle for ease of use.

13.2 To fasten the netting place the chord securely over the hooks.

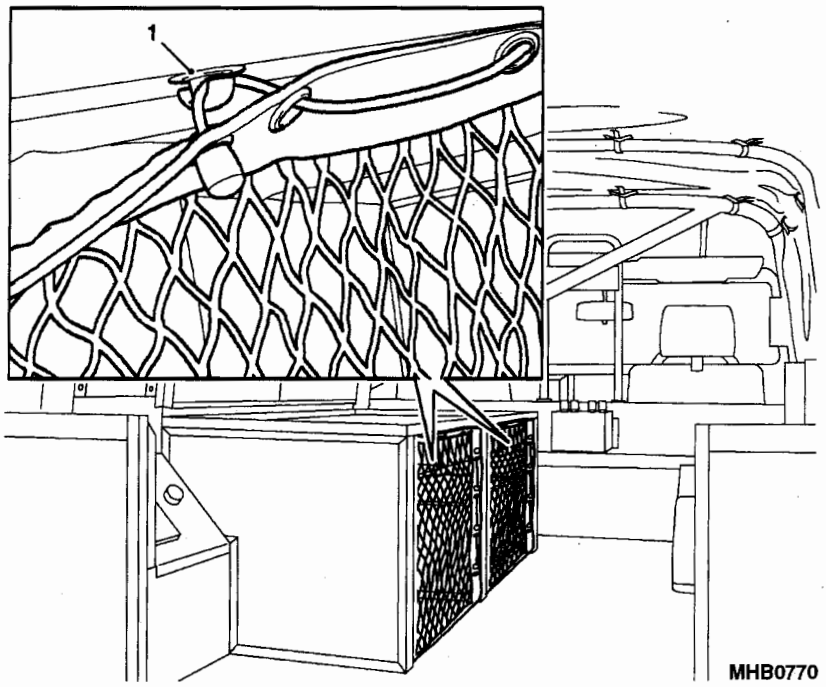

Fig 11 Restraining netting

BLACKOUT CURTAIN

14 The blackout curtain (Fig 12) is to shut out any light coming from the front of the vehicle also separating it from the driving cabin.

14.1 Fit the curtain around the rifle clip bracket and attach to the roof using velcro strips. The centre of the curtain (1) fits through the top of the rifle bracket and down into the drivers cabin.

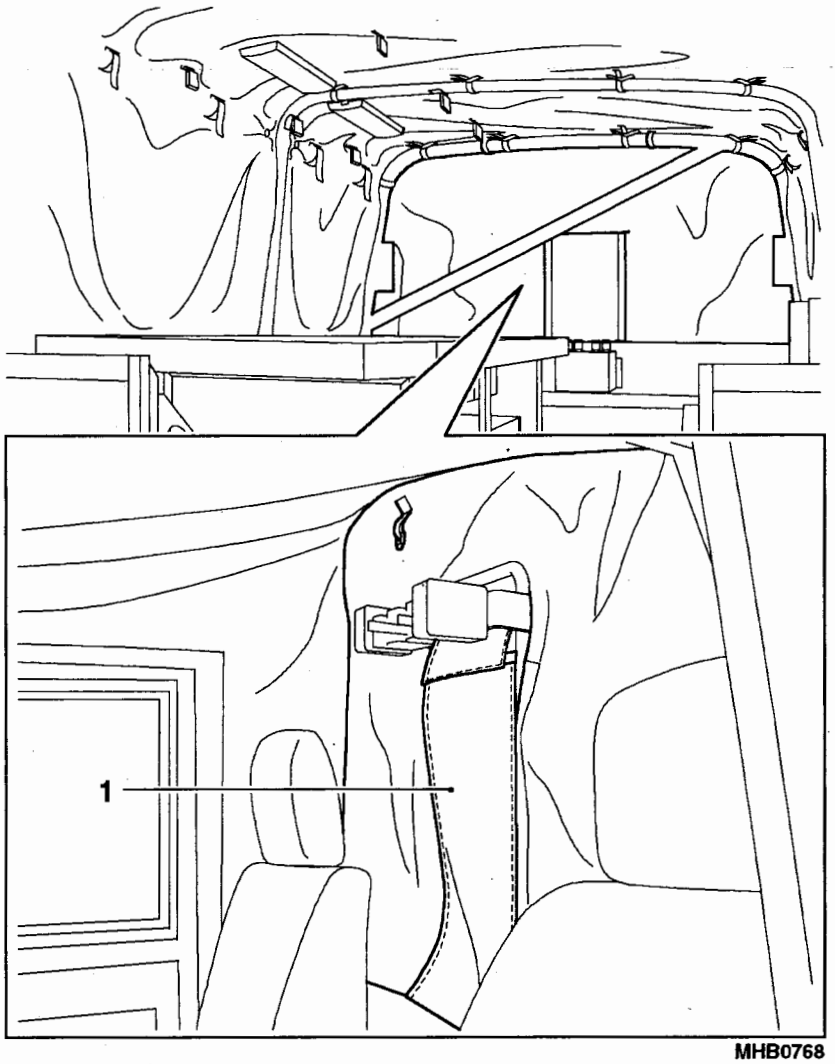

Fig 12 Blackout curtain

ROOFRACK AND COVER

CAUTIONS

(1) When loading the roof rack the maximum weight allowed is 70kg only.

(2) The roof rack cover can only be used when there is a load on the roof rack.

15 The roof rack fitted to the top of the vehicle can take a load of up to 70 kg.

16 Load the rack in accordance and guidelines laid out in the appropriate documents.

17 When loaded the cover (Fig 13) can be placed over it to safe guard the contents. Ensure that the cover is secured by the elasticated straps over the brackets provided fro them on the racking.

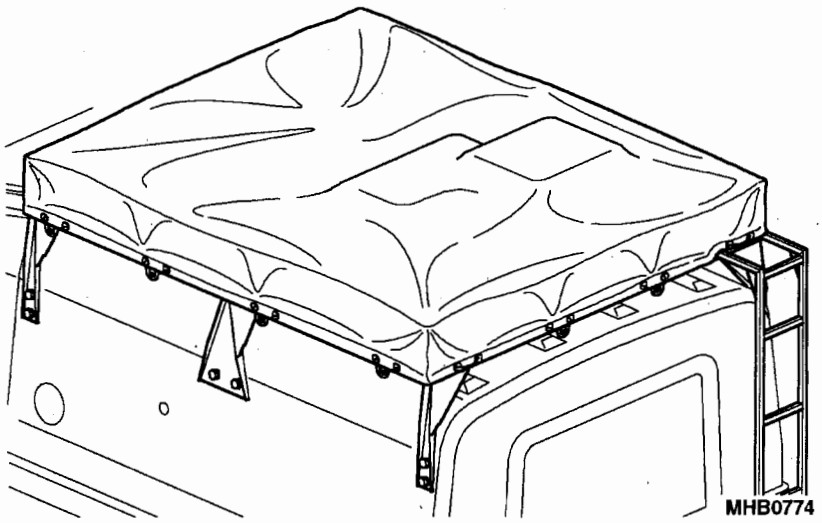

Fig 13 Roof rack cover

EARTH SPIKE

18 The earth spike and cable (Fig 14) are stowed in the rear of the vehicle and are to dissipate any charge to ground therefore protecting the personnel and vehicle from harm.

18.1 Fit the cable (1) to the earth spike (3) and also to the vehicle using fixings (3).

18.2 Place the spike and drive into the ground.

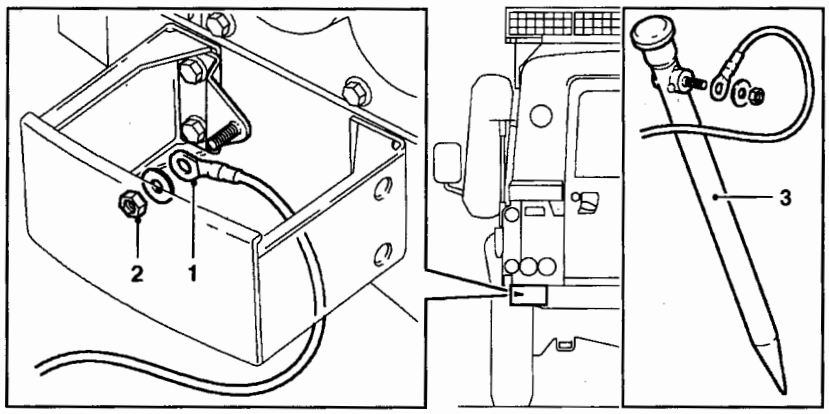

Fig 14 Earth spike

CHAPTER 3-9

WEAPONS MOUNTED INSTALLATION KIT (RWMIK)

CONTENTS

Para

1 Introduction
2 Canopy
  Fitting the canopy
3 Wire cutter
4 [redacted]
5 Tyre pressures (CAUTION)
6 Jerry can stowage
7 Sand Channels (WARNINGS)
8 Barrel Clamps
9 Upright barrel clamp
10 Ammo tray H84
11 Ammo tray - Commanders footwell
12 AGL support strap
13 Bergan Straps
14 Crew Protection Weapons Mount (CPWM) (WARNINGS)
15 Slewing Ring Mount
16 Slewing ring winding handle
17 Slewing ring cam lock (WARNING)
18 Slewing ring mount handles (WARNING)
19 Slewing ring brake
20 Slewing ring rotation (WARNING)
21 Folding Interface Mount (FIM) (WARNINGS) (CAUTION)
22 Inverting the weapon mount
23 Returning the weapon mount to the ready position (CAUTION)
24 Gunners Support
28 Gunners platform
29 Unfolding the Platform (WARNING)
30 Folding the Platform (WARNING)
31 Shower proof dash cover
32 Air locker System (WARNINGS)
33 Driving on level, high traction surfaces
34 Driving on level, low traction terrain
35 Driving on uneven terrain
37 Driving Uphill
38 Descending steep slopes
39 Traversing slopes
40 Air locker switches

Table

1	Pressure for Michelin LT235/85 R16 tyres	7
2	Wheels	7

Fig

1	Wire cutter	5
2	Jerry can stowage	8
3	Sand Channels	10
4	Barrel clamps (HMG)	11
5	Upright barrel clamp	12
6	Ammo tray H84	13
7	Ammo tray – Commanders footwell	14
8	AGL Support strap	15
9	Bergan straps	16
10	Commanders crew protection mount	18
11	Ring mount winding handle	20
12	Ring rotation handles	21
13	Ring lock lever	22
14	Folding interface mount	25
15	Gunners support	27
16	Gunners platform	29
17	Shower proof dash cover	31
18	Air locker switches	35/36

INTRODUCTION

1 This sub-chapter describes all the items applicable to the Truck Utility Medium (TUM) Weapons Mounted Installation Kit (RWMIK) vehicles, which are not covered in the previous chapters.

CANOPY

2 The canopy is used when moving the vehicle in a peacetime condition,

Fitting the canopy

2.1 If fitted remove the wire cutter support tube (Fig 1 (2)) by removing a single bolt at the lower attachment point (1).

2.2 Remove the two fixings (3) at the top of the wire cutter.

2.3 Ensure that the windscreen is fitted correctly.

2.4 Fit the canopy support tubes above the front door apertures.

2.5 Fold the folding interface mount (FIM) (Fig 14 (2)) and the gunners support (Fig 15 (8)) through the slewing ring.

2.6 Fold the slewing ring winding handle (Fig 11 (2)) and reposition the slewing ring handles (Fig 12 (2)).

2.7 The rear canopy support hoop should be placed in position and locked into place using the two stays attached to rear roll bar. Secure using "R" clips.

2.8 Unfold the canopy and place on top of the roll cage with the front edge towards the front of the vehicle with the sides hanging down.

2.9 Locate the strip at the front of the canopy and place into the header rail on top of the windscreen. Ensure that the canopy is centrally positioned otherwise the connection plates will be difficult to fit.

2.10 Fit the canopy connection plates to the sides of the windscreen and "A" pillar using the bolts already fitted to the vehicle.

2.11 Hook the side tension rope over the front loop situated at the rear of the door aperture just below the capping on each side of the vehicle, then position the pocket in the canopy over the same loop.

2.12 Continue along the sides of the vehicle hooking the rope underneath the cleats, then tension rope before securing in the cam cleat.

2.13 Working inside the vehicle cab feed the front tensioning straps back over the front roll hoop then bring forward onto the windscreen or the short straps that exist, then tension straps to remove sagging.

2.14 Working inside the rear of the vehicle fit the side securing flaps around the diagonal bars and join them using the velcro pads provided.

2.15 Roll back roof panel, feed straps through slots in roll cage top hamper plate at sides, back and front and secure.

2.16 Refit the roof panel ensuring the rope is passed through the eyelet at the rear before securing the rope in the cam cleat.

2.17 Feed the rear tensioning straps over the rear canopy hoop and hook under the rear capping, then tension straps to remove sagging from roof section.

2.18 Secure each side of the rear hatch using the rope hooks and eyes, then tension the rope and secure in the cam cleats.

2.19 Hook the bungee straps on the inside of the rear hatch under the three hooks located on the inside face of the rear pannier, ensure the flap on the rear hatch is over the outside of the pannier top tube.

2.20 Fully zip up each door and hook bungee straps under the cleats located down the "B" pillar.

2.21 Finally check the overall fit, and adjust tension of straps if necessary.

WIRE CUTTER

3 To remove the wire cutter (refer to Paras 2.1 and 2.2). To fit the wire cutter is the reverse of removing.

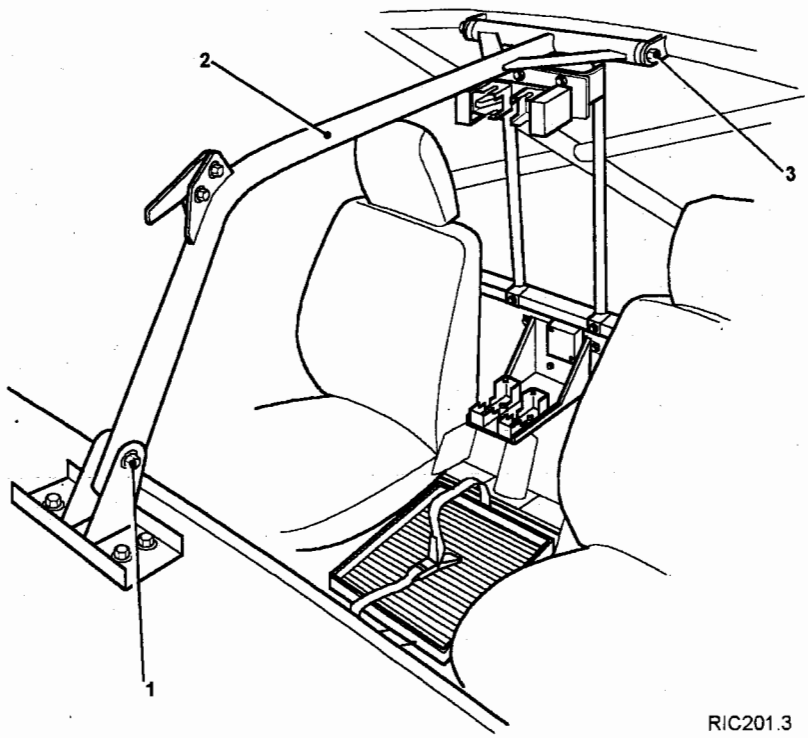

Fig 1 Wire cutter

[redacted]

TYRE PRESSURES

[redacted]

CAUTION

The tyres should not be run in a partially deflated condition, (such as "emergency soft pressure" on soft sand) as internal tyre damage may result.

TABLE 1 PRESSURE FOR MICHELIN LT235/85 R16 TYRES

Serial (1)	Vehicle/wheel (2)	Pressure (3)	
		Bar	lb/in^2
1	RWMIK front wheels	3.1	45
2	RWMIK rear wheels	5.4	78

TABLE 2 WHEELS

Serial (1)	Vehicle (2)	Wheels (3)	Valves (4)	Wheel Nut Torque (5)	
				Nm	lb ft
1	RWMIK	NSN 7WMK 2530 99 226 6614	Metal NSN 7RU 2610 99 405 6007	255	188

JERRY CAN STOWAGE

6 There is provision for the stowage of 2 jerry cans. One mounted on each side at the vehicle at the rear. The jerry can is strapped to a folding steel frame bolted to the side of the vehicle and secured with a ratchet and strap.

6.1 To unfold the jerry can stowage frame. Lift the lever on the ratchet and pull the strap from the ratchet to release the platform, lower the platform (Fig 2 (1)).

6.2 To fold the jerry can stowage frame. Lift the platform and secure with ratchet strap, operate the ratchet to secure the platform.

6.3 To release the jerry can. Lift the lever on the ratchet (Fig 2 (2)) and pull the strap from the ratchet to release the jerry can.

6.4 To stow the jerry can. Position the jerry can on the steel frame and operate the ratchet to secure the strap through the handle of the jerry can

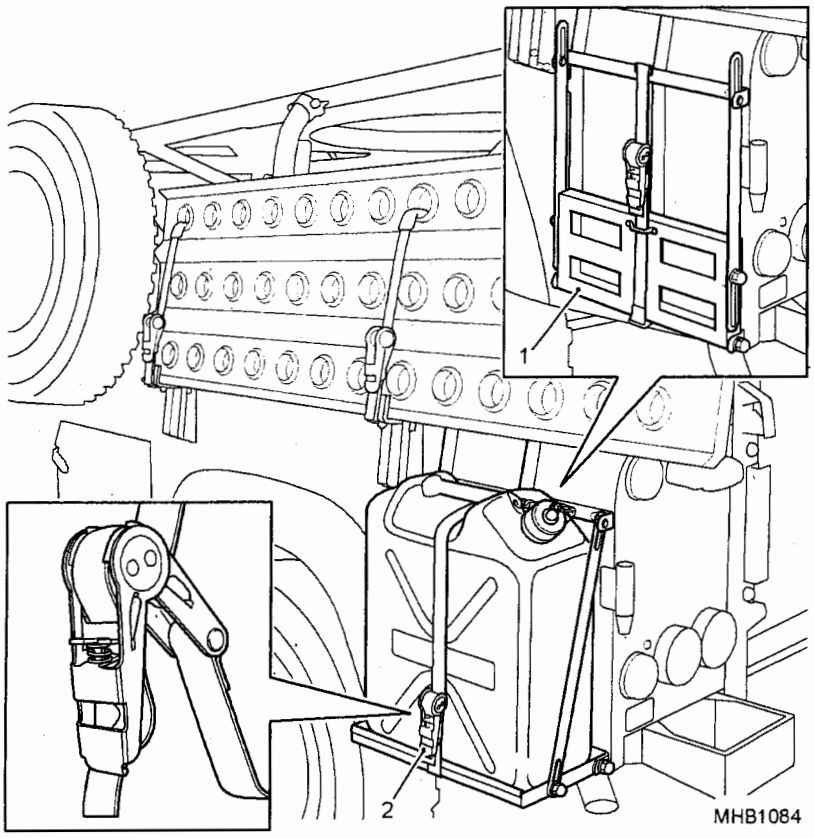

Fig 2 Jerry can stowage

SAND CHANNELS

7 Sand Channels are provided to assist in the recovery of the vehicle in arduous conditions. The channels are mounted to the side of the vehicle on brackets and secured with ratchets and straps.

WARNINGS

(1) FALLING OBJECTS. ALWAYS SUPPORT THE SAND CHANNELS ON THE BRACKETS WHILST RELEASING OR FASTENING THE RATCHETS.

(2) SHARP EDGES. HANDLE THE SAND CHANNELS WITH CARE.

To remove the sand channels from the vehicle:

7.1 Release the ratchets (Fig 3 (1)) by lifting the ratchet handles upwards and slackening off the straps through the rear of the ratchet.

7.2 Free the straps from the sand channels and with the aid of an assistant lift the sand channels (2) clear of the mounting brackets.

To secure the sand channels to the vehicle:

7.3 With the aid of an assistant, lift the sand channels onto the mounting brackets on the side of the vehicle.

7.4 Feed the straps through the holes in the sand channels and into the rear of the ratchet. Ensure the reinforcing sleeve is located correctly through the sand channel hole.

7.5 Tighten the ratchets until the slack is removed from the straps and the channels are unable to move. DO NOT over tighten.

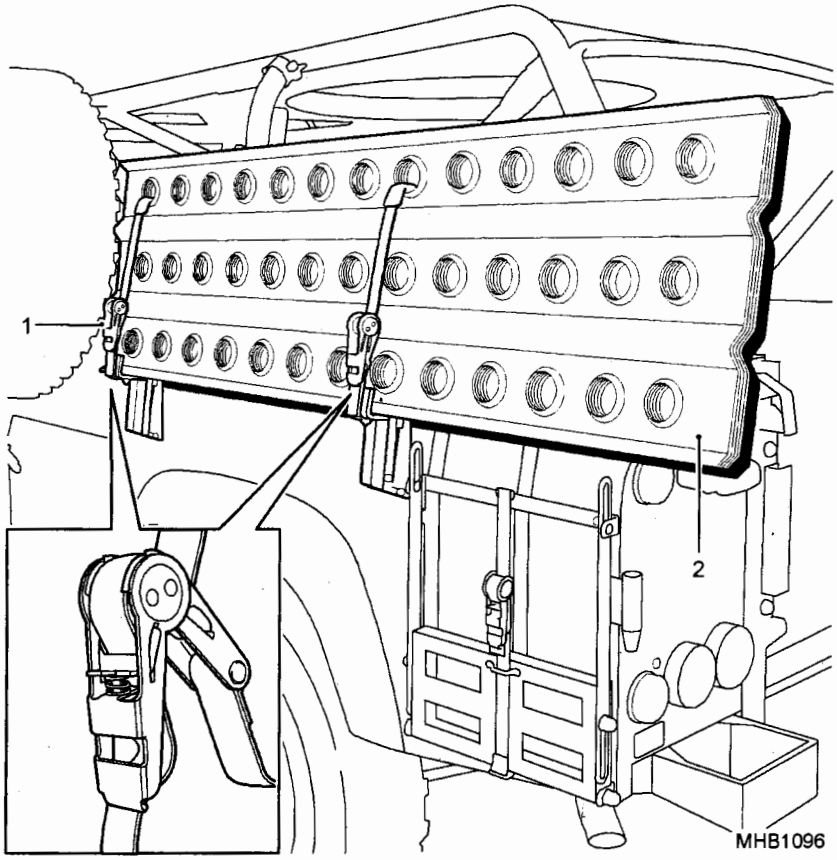

Fig 3 Sand channel stowage

BARREL CLAMPS

8 Barrel clamps are provided for the stowage of either two HMG or with a barrel clamp adaptor two GPMG barrels across the roll cage. The clamp system is similar for both types of barrel.

8.1 To install barrels into the clamps. Unlock the handles (Fig 4(2)) on both sides of the vehicle.

8.2 Open the top clamps (1) and position the ends of the barrel into the clamps.

8.3 Close the clamps and turn the handle into the locked position

8.4 To remove the barrels from the clamps. Unlock the handles (Fig 4(2)) on both sides of the vehicle.

8.5 Open the top clamps (1) and remove the barrel from the clamps.

8.6 Close the clamps and turn the handle into the locked position

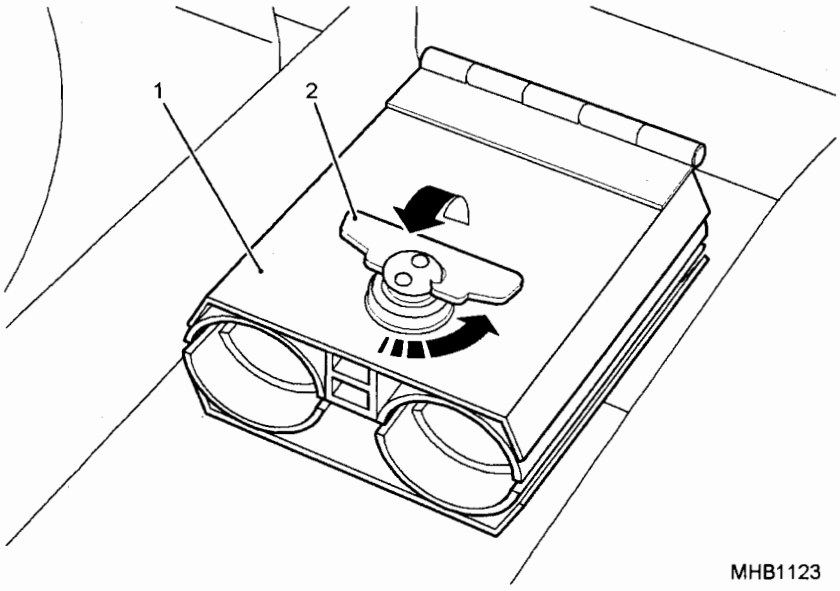

Fig 4 Barrel clamps (HMG)

UPRIGHT BARREL CLAMP

9 A vertical barrel clamp is provided for 7.62mm barrel stowage on the left hand side of the commanders foot well.

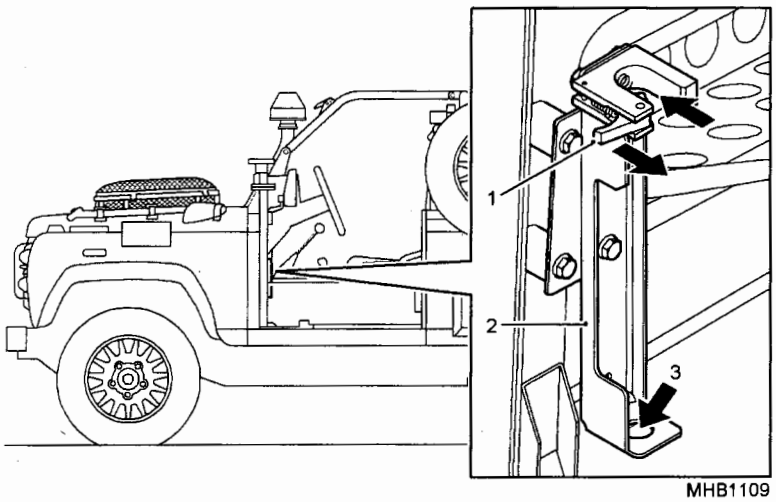

Fig 5 Upright barrel clamp

9.1 To install barrel into the barrel clamp. Insert the barrel into the hole (Fig 5 (3)) on the clamp (2).

9.2 Pull the lever (1), slide barrel into the clamp and release lever.

9.3 To remove the barrel from the clamp. Pull the lever (1), slide the barrel from the clamp.

9.4 Remove the barrel from the hole (3).

AMMO TRAY H84

10 A H84 ammo tray is mounted on the commanders side of the transmission tunnel.

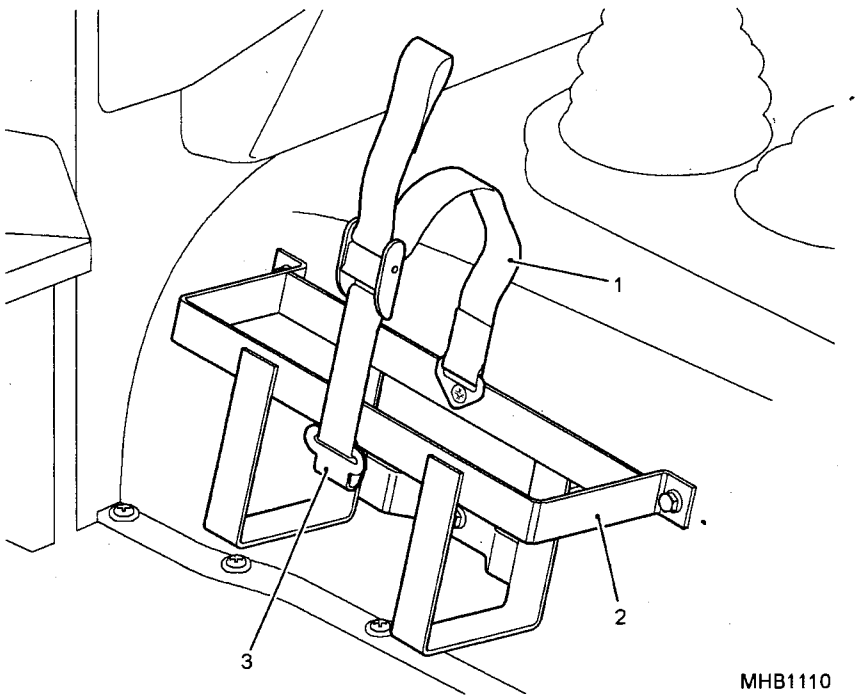

Fig 6 Ammo tray H84

10.1 To install ammo tray into mount. Slide ammo tray into mount (Fig 6 (2)) from above.

10.2 Locate hook (3) under rail and tighten strap (1)

10.3 To remove ammo tray from mount. Release and unhook strap securing the ammo tray.

10.4 Lift the ammo tray from the mount.

AMMO TRAY - COMMANDERS FOOTWELL

11 An ammo tray is mounted in the commanders footwell.

11.1 To install ammo tray into mount. Release the ratchet strap (Fig 7 (1)).

11.2 Slide ammo tray onto mount (2) secure ammo tray with ratchet strap (1).

11.3 To remove ammo tray from mount. Release Ratchet strap securing the ammo tray.

11.4 Slide the ammo tray from the mount.

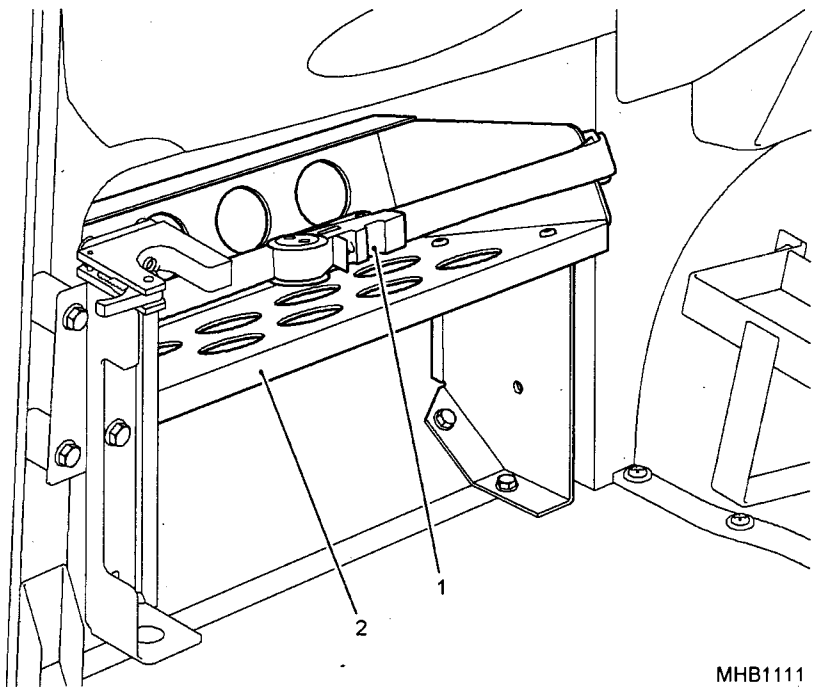

Fig 7 Ammo tray - Commanders footwell

AGL SUPPORT STRAP

12 A support strap is provided to secure the automatic grenade launcher (AGL). The ratchet strap is mounted on two eyebolts on the rear of the gun ring mount.

12.1 Release the ratchet (Fig 8 (3)) by lifting the ratchet handle and slackening off the strap (4) through the rear of the ratchet. Reverse procedure to tighten.

12.2 If necessary, the straps can be removed from the mounting by releasing the spring loaded catches (2) from the fixing point (1).

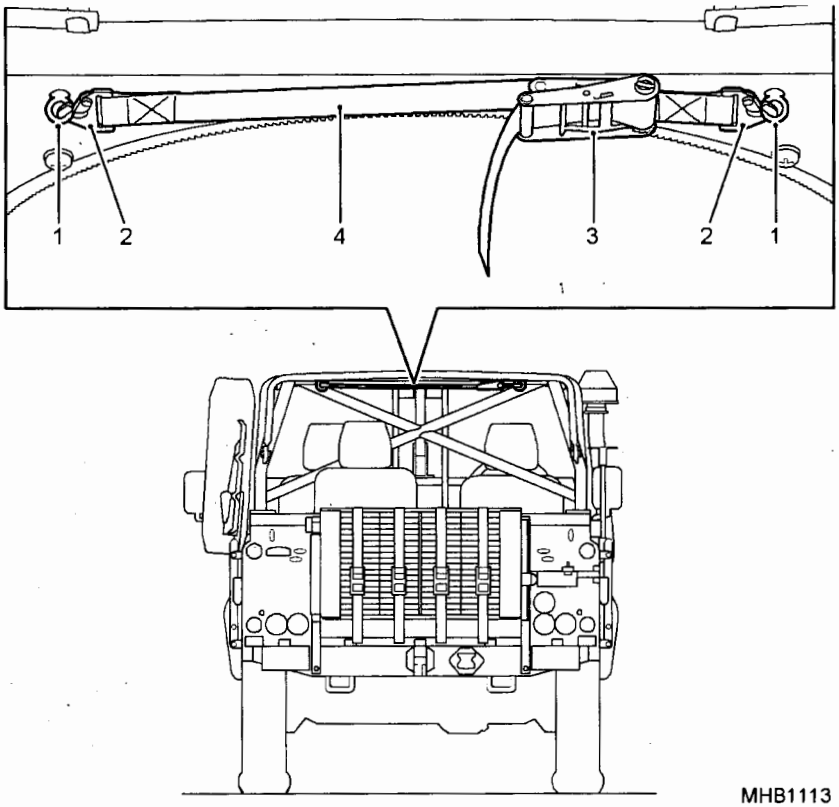

Fig 8 AGL support strap

BERGAN STRAPS

13 Bergan straps are provided on both sides of the vehicle.

13.1 To attach bergan. Unscrew the gate (Fig 9 (2)) on the karabiner (1).

13.2 Insert the strap of the bergan (3) on to the karabiner

13.3 Tighten the gate on the karabiner.

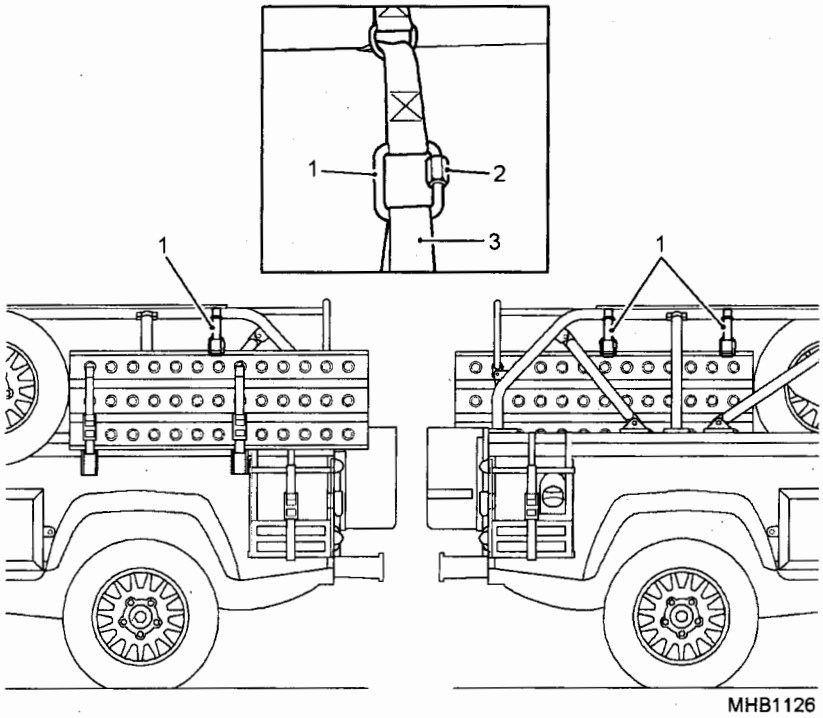

Fig 9 Bergan straps

COMMANDERS CREW PROTECTION MOUNT WEAPON MOUNT (CPWM)

WARNINGS

(1) DANGER TO PERSONNEL. THE SWING ARM SHOULD BE STOWED IN THE NORMAL LOCKED POSITION DURING TRANSIT. FAILURE TO LOCK THE SWING ARM DURING TRANSIT COULD RESULT IN INJURY TO THE OPERATOR AND/OR OTHER PERSONNEL CAUSE BY THE MECHANISM SWINGING FREELY AND WITHOUT CONTROL.

(2) FINGER TRAP. THE CPWM ROTATES ABOUT THE SWINGING ARM AND THE SWINGING ARM ROTATES ABOUT THE MOUNTING POST. INJURY WILL RESULT IF FINGERS OR HANDS ARE ALLOWED TO BE TRAPPED BETWEEN THE MOVING PARTS.

14 The Commanders crew protection mount is operated as follows:

14.1 Turn lever (Fig 10 (1)) anti clockwise and rotate swing arm (2) to required position.

14.2 Turn lever (1) clockwise to lock swing arm in position

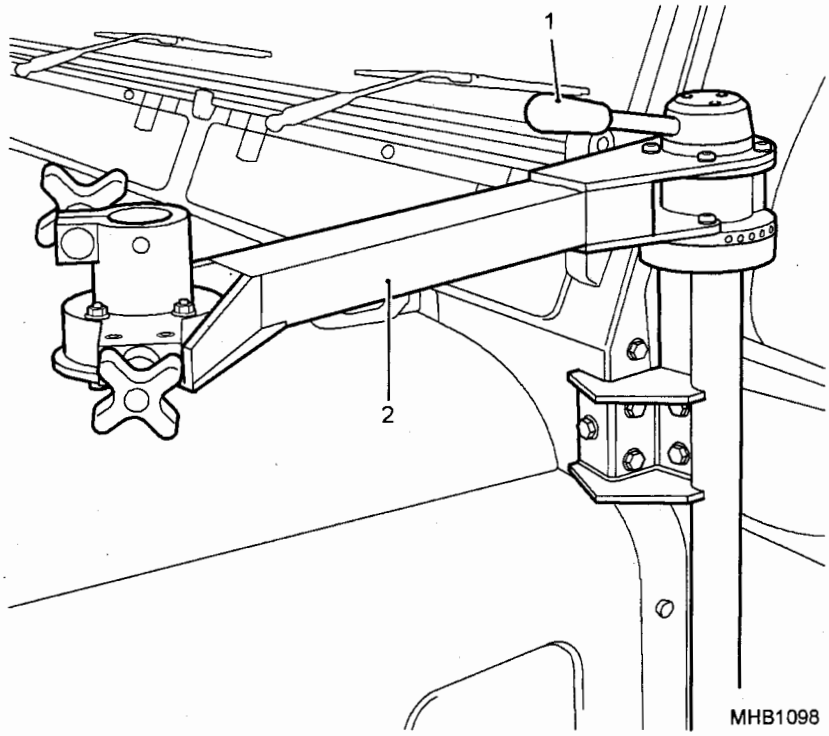

Fig 10 Commanders crew protection mount

SLEWING RING MOUNT

15 The slewing ring mount operation is described in the following paragraghs:

Slewing ring winding handle

16 To rotate slewing ring using the winding handle

16.1 Unlock the Slewing Ring by operating the brake mechanism (Fig 13).

16.2 Hold the knurled grip (Fig 11 (1) and wind the handle (2) in a clockwise/anticlockwise direction to rotate the slewing ring (3) to the desired position.

16.3 Reapply the brake mechanism and check that the brake is correctly applied.

Slewing ring cam lock

WARNING

INJURY TO PERSONNEL. THE SLEWING RING CAM LOCK LEVER SHOULD BE LEFT IN THE ENGAGED POSITION (HORIZONTAL) WHEN LEFT UNATTENDED. IF LEFT IN THE DISENGAGED POSITION (VERTICAL) IT MAY RESULT IN INJURY TO AN OPERATOR WORKING IN THE REAR OF THE VEHICLE.

17 The slewing ring cam lock (Fig 11 (4)) is operated by a lever which engages/disengages the winding mechanism as follows:

17.1 To engage the winding handle mechanism. Move the lever (4) up into the horizontal position.

17.2 To disengage the winding handle mechanism. Move the lever (4) down into the vertical position.

17.3 To fold winding handle. Lift the spring loaded knurled grip (1) and fold towards the handle (2).

17.4 To unfold winding handle. Fold the knurled grip (1) upwards away from handle (2) until it locates vertically.

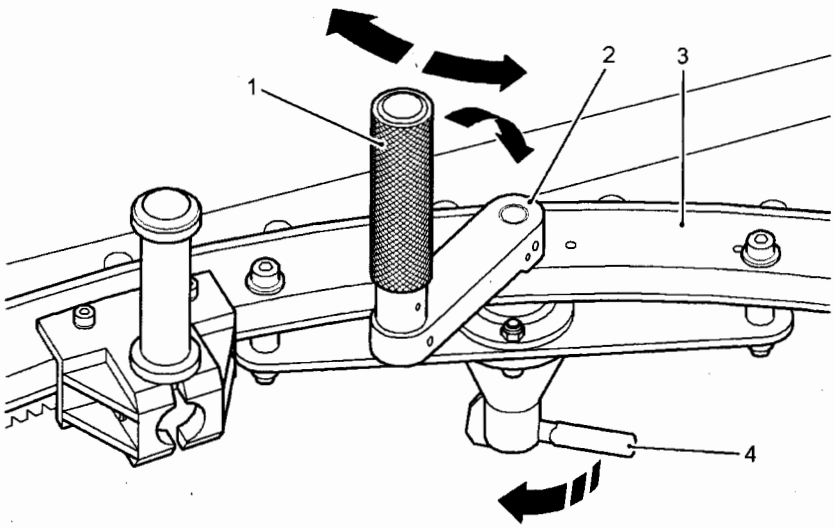

MHB1114

Fig 11 Slewing ring winding handle

Slewing ring mount handles

18 Two handles (Fig 12 (2)) are fitted, set at 180 degrees from each other, and provide hand grips for the operator to aid the manual rotation of the ring (1).

WARNING

INJURY TO PERSONNEL. LEAVING THE SLEWING HANDLES IN THE HORIZONTAL POSITION MAY RESULT IN INJURY TO AN OPERATOR SEATED OR WORKING WITHIN THE RING.

18.1 The Slewing Ring handles may be set in 3 positions, downwards, horizontal or upwards.

18.2 The handles are spring loaded and are moved by pulling the handle out to disengage from the mounting bracket and returned to the position of choice.

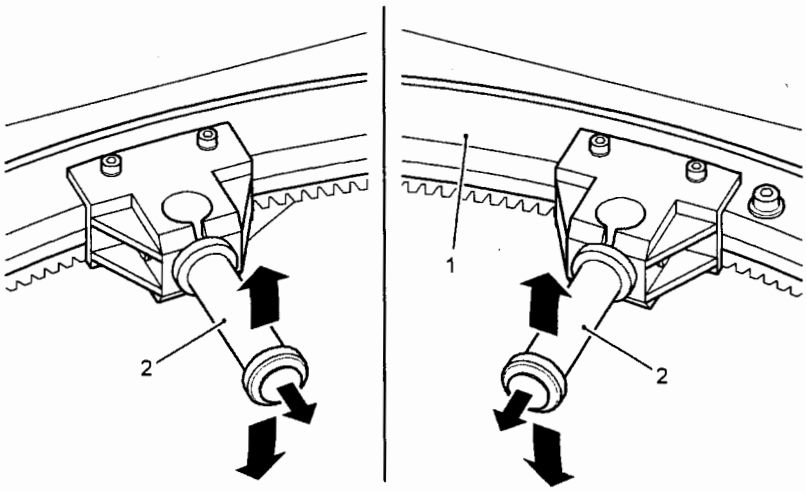

MHB1099

Fig 12 Slewing Ring handles

Slewing ring brake

19 The Slewing Ring (Fig 13 (3)) is locked in position by a lock (1).

19.1 The Slewing Ring lock is operated by a single lever (2), which is spring loaded and may be placed in either the LOCKED or UNLOCKED positions.

19.2 The lock handle acts as a lever and positions a locking bar between the studs on the upper and outer edge of the ring.

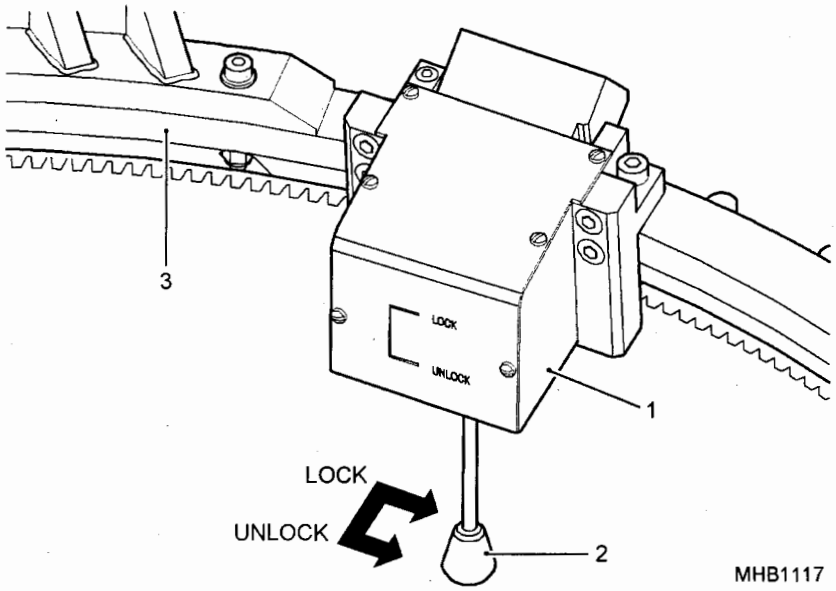

Fig 13 Slewing Ring brake

Slewing ring rotation

20 To rotate the slewing ring proceed as follows:

WARNING

INJURY TO PERSONNEL. LEAVING THE SLEWING HANDLES IN THE HORIZONTAL POSITION MAY RESULT IN INJURY TO AN OPERATOR SEATED OR WORKING WITHIN THE RING.

20.1 Grasp the Slewing Ring handles and select the desired handle position (Fig 12 (2)).

20.2 Unlock the Slewing Ring by operating the brake mechanism (Fig 13).

20.3 Brace against the gunners support and rotate the Slewing Ring to the desired position.

20.4 Reapply the brake mechanism and check that the brake is correctly applied.

20.5 Return the handles to the vertical position

FOLDING INTERFACE MOUNT (FIM)

21 The folding interface mount is operated as follows:

WARNINGS

(1) DANGER TO PERSONNEL. IF THE WEAPON HAS BEEN FIRED CARE SHOULD BE TAKEN AS PARTS OF THE WEAPON MAY BE EXTREMELY HOT AND COULD CAUSE INJURY TO PERSONNEL OR DAMAGE TO EQUIPMENT.

(2) PERSONNEL INJURY HAZARD. THE PROCEDURE OF INVERTING THE WEAPON THROUGH THE SLEWING RING MUST BE CARRIED OUT BY TWO PERSONS. FAILUR TO DO SO MAY RESULT IN INJURY TO PERSONNEL AND/OR DAMAGE TO EQUIPMENT.

CAUTION

EQUIPMENT DAMAGE. If the .50 HMG is the weapon in use, remove the barrel and place in the spare barrel stowage bracket, prior to inverting the mount. Failure to do so could result in fouling, and/or equipment damage.

Inverting the weapon mount

22 The weapon and soft mount is inverted through the opening of the slewing ring in the following way.

22.1 Make sure that the mounted weapon is in the UNLOADED condition.

22.2 Slew the ring into a position, which allows sufficient space within the vehicle to accept the mounted weapon when folded through the Slewing Ring.

22.3 Lock the Slewing Ring in position by use of the Slewing Ring locking mechanism (Fig 13)

22.4 Operate the lever ratchet assembly (Fig 14 (3)) and loosen the clamping bolt (6) on the front of the FIM (2).

22.5 Remove the "R" clip (4) from the main cross pin (1).

22.6 Support the weight of the weapon and remove the main cross pin (1).

22.7 Control the weight of the weapon, and swing the mount up and over allowing the body of the weapon to swing through the Slewing Ring mount.

NOTE

If the .50 HMG is fitted, the barrel must be removed prior to inverting the mount and weapon through the slewing ring.

22.8 Replace the main cross pin (1) into the FIM and refit the "R" clip (4).

Returning the weapon mount to the ready position

CAUTION

EQUIPMENT DAMAGE. The ratchet handle must be folded back against the FIM to prevent the ratchet from coming into contact with the rear ROPS frame, when the weapon mount is being inverted, otherwise damage to the ratchet may result, rendering the FIM unserviceable.

23 To return the weapon mount to the ready position proceed as follows:

23.1 Remove the "R" clip (1) and main cross pin (4) from the FIM.

23.2 Control the weight of the weapon and depress the release locking mechanism (5) on the left hand side of the FIM (2).

23.3 Swing the weapon up through the slewing ring, maintaining control of the mount and weapon.

23.4 Fit the main cross pin (1) and "R" clip (4).

23.5 Operate the lever ratchet assembly (3) and tighten the clamping bolt (6) against the cross pin (1).

23.6 Fold the ratchet handle (3) back against the FIM.

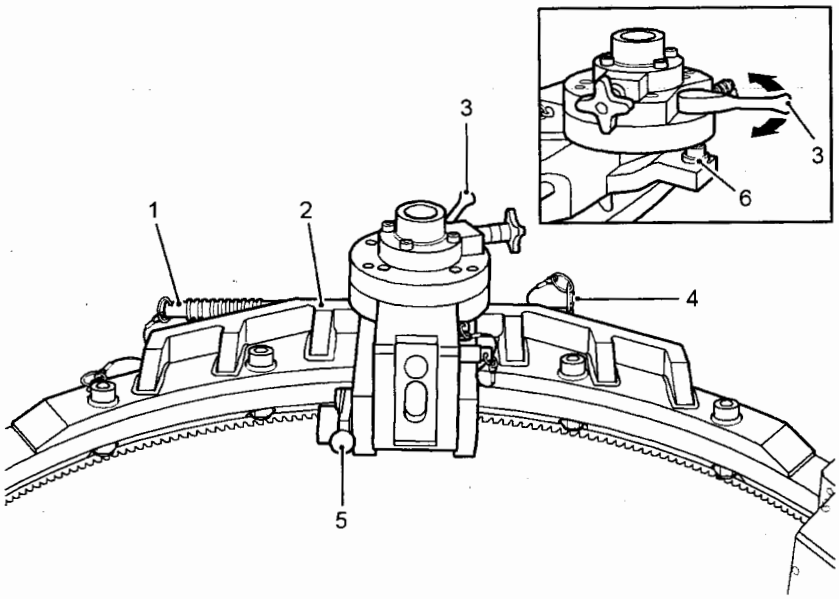

Fig 14 Folding interface mount

GUNNERS SUPPORT

24 <u>To adjust height of gunners support</u>

24.1 Remove two gate pins (Fig 15 (3)) from each side of support frame (4).

24.2 Position support frame at required height.

24.3 Refit two gate pins (3) through brackets on each side of support frame.

25 To adjust height of gunners support backrest

25.1 Remove two gate pins (1) from each side of support frame (4).

25.2 Position backrest (2) at required height.

25.3 Refit two gate pins (1) through support frame on each side of backrest.

26 To adjust rake of backrest:

26.1 Remove gate pin (10) from each side of support frame (9).

26.2 Pull/push support frame to align with alternative holes

26.3 Refit gate pin (10) on each side of support frame (9).

27 To fold gunners support:

27.1 Remove gate pins (5) from both sides of support frame (6).

27.2 Pivot support frame (6) forwards.

27.3 Remove gate pins (7) from both sides of support frame (6).

27.4 Pivot backrest backwards (8).

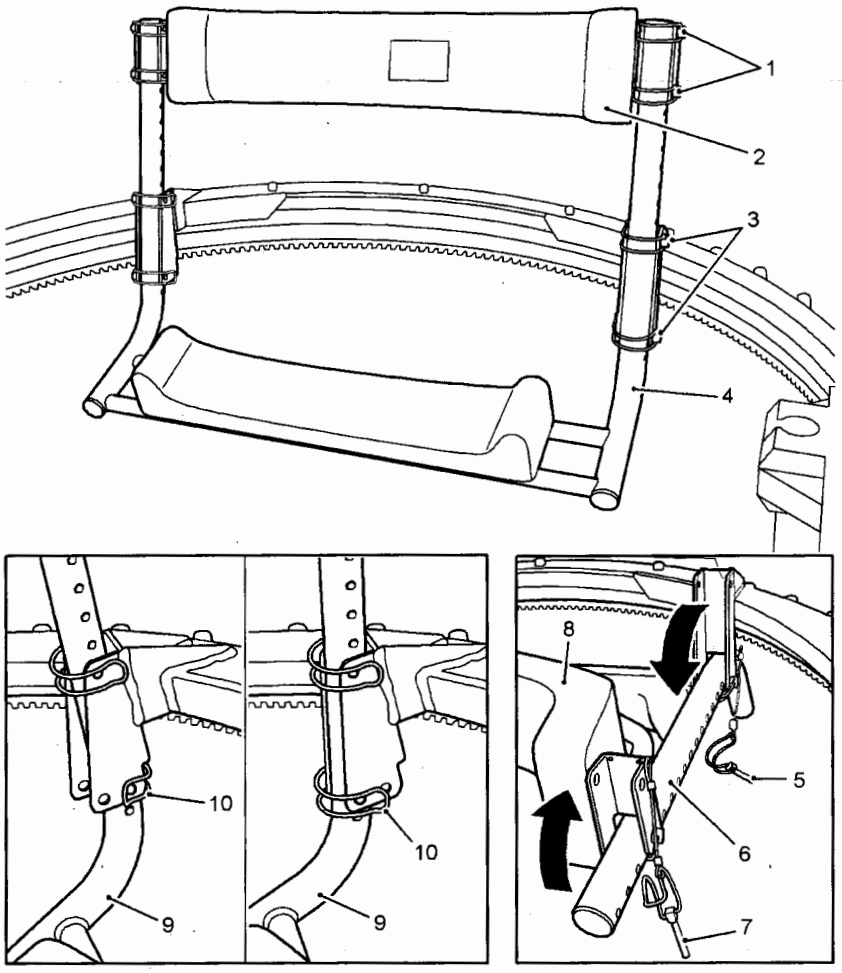

Fig 15 Gunners support

GUNNERS PLATFORM

28 The gunners platform (Fig 16) is stowed folded in the rear of the vehicle and is secured with a strap when not in use.

Unfolding the Platform

29 To unfold the platform proceed as follows:

29.1 Release the strap securing the folded platform (1)

29.2 Pivot the platform downwards using handle (4).

29.3 Pull the release cable (9) to adjust the height of the platform (8) if required.

29.4 Unfold the platform extension (3), pull the release cable (6) to allow adjustment of the arms (7).

WARNING

THE PLATFORM EXTENSION (3) IS NOT SELF SUPPORTING AND MUST BE HELD WHEN LIFTING /LOWERING.

29.5 Locate the platform in the support bracket (9).

Folding the Platform

30 To fold the platform proceed as follows:

30.1 Lift the platform from the support bracket (9).

30.2 Pull the release cable (6) and fold the platform extension (3).

WARNING

THE PLATFORM EXTENSION (3) IS NOT SELF SUPPORTING AND MUST BE HELD WHEN LIFTING /LOWERING.

30.3 Pivot the platform upwards using handle (4).

30.4 Fix the folded platform in position with securing strap (1).

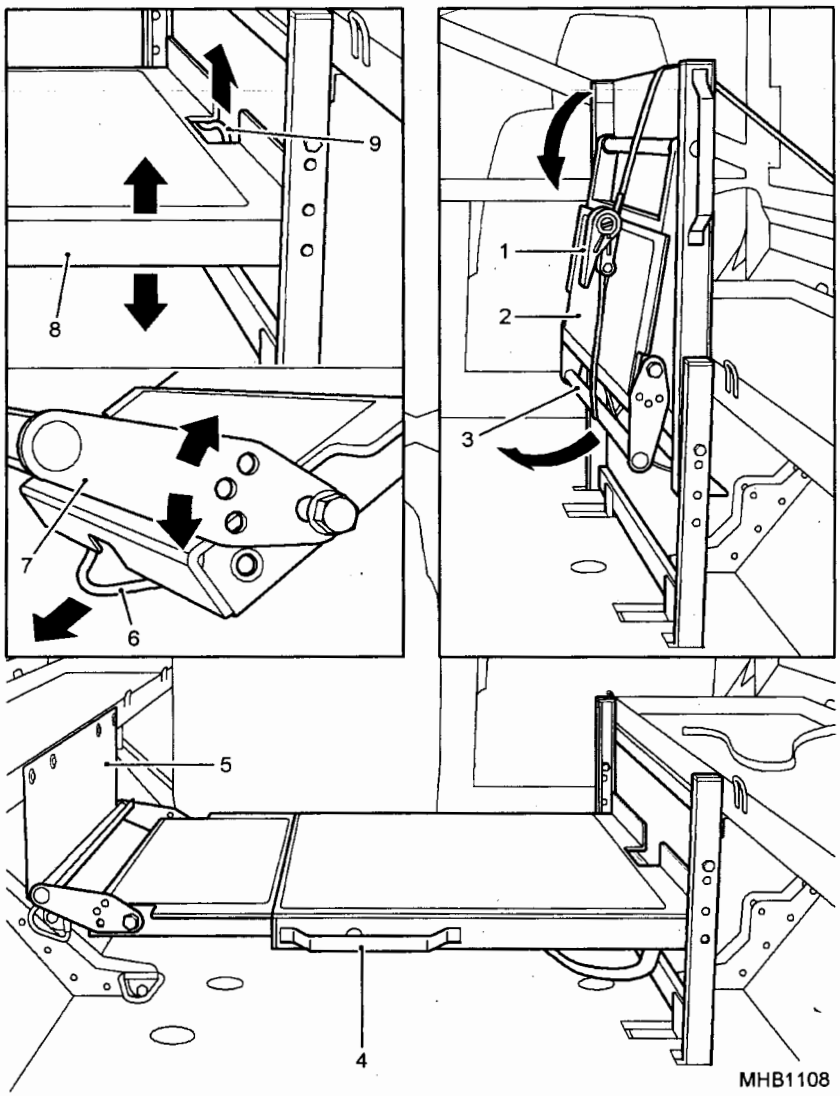

Fig 16 Gunners platform

SHOWER PROOF DASH COVER

31 A shower proof dash cover is provided for the protection of the dashboard during adverse weather conditions. Fit the shower proof dash cover as follows:

31.1 Release the bonnet catch and raise the bonnet (refer to Chap 2-1).

31.2 Release the wire cutter from the dash mount (Fig 17 (1)).

31.3 Position shower proof cover (2) over dash ensuring the wire cutter is passed through the sock and the Velcro strap (3) is attached under the steering column.

31.4 Re-attach the wire cutter to the dash mount and pull the cord tight around the sock.

31.5 Tuck the front of the cover (8) in between the bonnet and front scuttle ensuring that all apertures line up with the appropriate part.

31.6 Attach the Velcro straps (4-7) to the staples on the scuttle at positions shown.

31.7 Close the bonnet.

31.8 Removal of the cover is the reversal of the above.

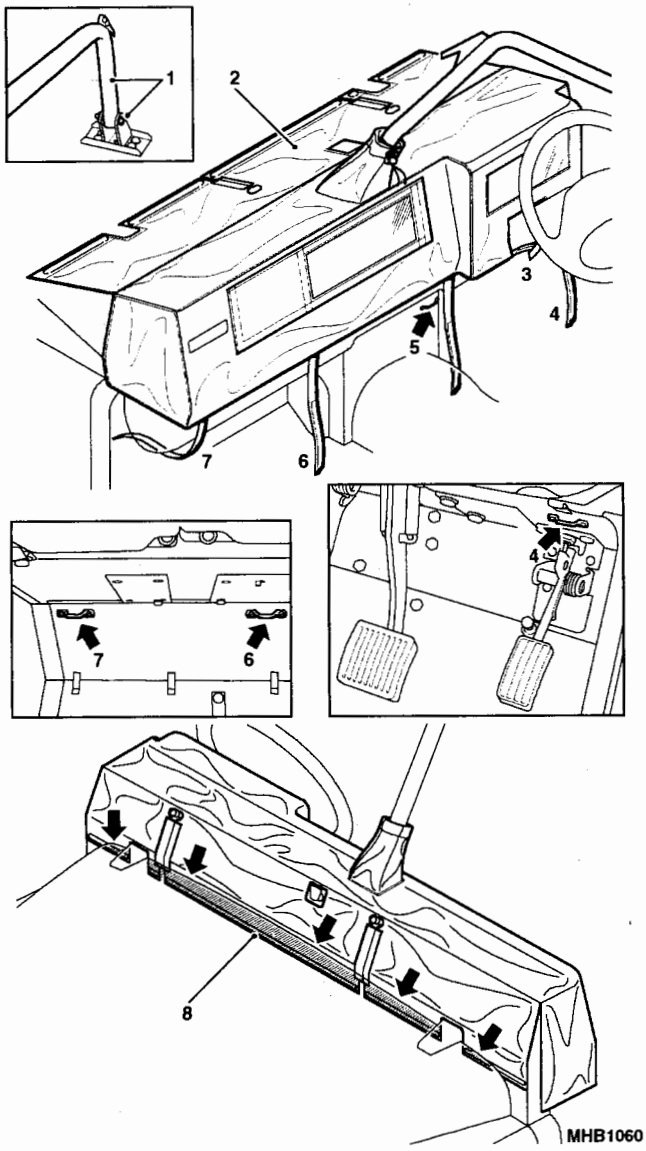

Fig 17 Shower proof dash cover

AIR LOCKER SYSTEM

32 The air locker system is provided to increase traction over arduous terrain by locking the axle differentials.

WARNINGS

(1) WHEN NOT IN USE KEEP THE AIR LOCKERS AND THE AIR COMPRESSOR SWITCHED OFF.

(2) HAVING THE AIR LOCKER(S) ENGAGED WILL AFFECT THE STEERING.

(3) ACCIDENTAL LOCKING OR UNLOCKING OF THE AIR LOCKER(S) COULD RESULT IN LOSS OF CONTROL OF THE VEHICLE. TO AVOID THE RISK OF UNINTENTIONAL AIR LOCKER ENGAGEMENT, ALWAYS LEAVE THE AIR LOCKER ACTUATION SWITCH IN THE OFF POSITION WHEN NOT IN USE.
NEVER USE THE COMPRESSOR SWITCH TO ENGAGE THE AIR LOCKER(S).

(4) NEVER ENGAGE THE AIR LOCKER DURING CORNERING OR WHEN THE WHEELS ARE SPINNING AS THIS COULD DAMAGE THE LOCKING MECHANISM. THE AIR LOCKER DOES NOT ALWAYS ENGAGE INSTANTANEOUSLY WHEN THE VEHICLE IS STATIONARY. THE VEHICLE MAY NEED TO ROLL A LITTLE UNTIL THE LOCKING MECHANISM CAN FALL INTO MESH.

(5) AIR LOCKERS SHOULD NEVER BE ENGAGED DURING WHEEL SPIN (I.E. A SITUATION WHEN ONE WHEEL IS SPINNING FASTER THAN THE OTHER ON THE SAME AXLE). THIS COULD CAUSE UNDUE WEAR OR DAMAGE TO THE AIR LOCKER OR OTHER DRIVE TRAIN COMPONENTS AS A RESULT OF THE SHOCK CREATED WHEN BOTH WHEELS ARE SUDDENLY FORCED TO TURN AT THE SAME SPEED. MAKE SURE THAT THE VEHICLE IS STOPPED OR DRIVING IN A STRAIGHT LINE WITHOUT ANY ACCELERATION OR DECELERATION (I.E. DO NOT OPERATE THE ACCELERATOR OR THE BRAKES WHILE LOCKING THE AIR LOCKER.

WARNINGS

(6) TO REDUCE THE RISK OF VEHICLE DRIVE TRAIN DAMAGE AND/OR LOSS OF CONTROL OF THE VEHICLE, ALWAYS REDUCE SPEED WHEN THE AIR LOCKER(S) ARE ENGAGED, OR ANY TIME YOU ARE NEGOTIATING ROUGH TERRAIN. SLOW AND METHODICAL OFF ROAD DRIVING WILL PROLONG THE LIFE OF ALL THE DRIVE TRAIN COMPONENTS.

(7) THE AIR LOCKER CANNOT BE DISENGAGED WHILE UNDER TORQUE. EVEN WHEN SWITCHED OFF. IT WILL SOMETIMES BE NECESSARY TO UNTORQUE THE AXLE BY ROLLING THE VEHICLE FORWARDS OR BACKWARDS SLIGHLY BEFORE THE LOCKING MECHANISM WILL UNLOCK.

Driving on level, high traction surfaces

33 As long as all wheels stay in contact with a high traction surface, locking the differential is not necessary and could place undue load on the drive train. Cornering on high traction terrain with the differential locked (especially the front) is not recommended as it creates high torque loads across the axle shafts and CV joints.

Driving on level, low traction terrain

34 Heavy traction loss can affect overall vehicle control with unlocked differentials, as traction is lost drive is randomly transferred from side to side across the axle. Engage the Air Lockers to avoid loss of traction.

Driving on uneven terrain

35 Rock crawling, ditch crossing and other challenging terrain can make it impossible to keep all four wheels on the ground. Engage the Air Lockers to avoid loss of traction.

36 Plan your route across obstacles so you don't compromise the vehicles centre of gravity and roll the vehicle. Use low range and idle throttle where possible and proceed slowly.

Driving Uphill

37 If possible align the vehicle straight up the incline and keep the rear Air Locker engaged to maintain a constant push. Use of the front Air Locker is dependent on the nature of the terrain. Apply gentle throttle, do not wheelspin.

Descending steep slopes

38 If possible align the vehicle straight down the incline. Use engine braking on the descent. Engage the rear Air Locker once you start moving. Use of the front Air Locker can be of great benefit when engine braking downhill as it prevents the sudden surge felt when one wheel breaks traction.

Traversing slopes

39 When traversing a slope on a surface with low or unpredictable traction leave both Air Lockers disengaged.

Air locker switches

40 The Air Locker System is controlled by three illuminated rocker switches on the dashboard (Fig 18).

40.1 To operate the air locker system switch on the air compressor by pressing the switch (3).

40.2 To operate the front air locker to lock the front differential press the front air locker switch (1).

40.3 To operate the rear air locker to lock the rear differential press the rear air locker switch (2).

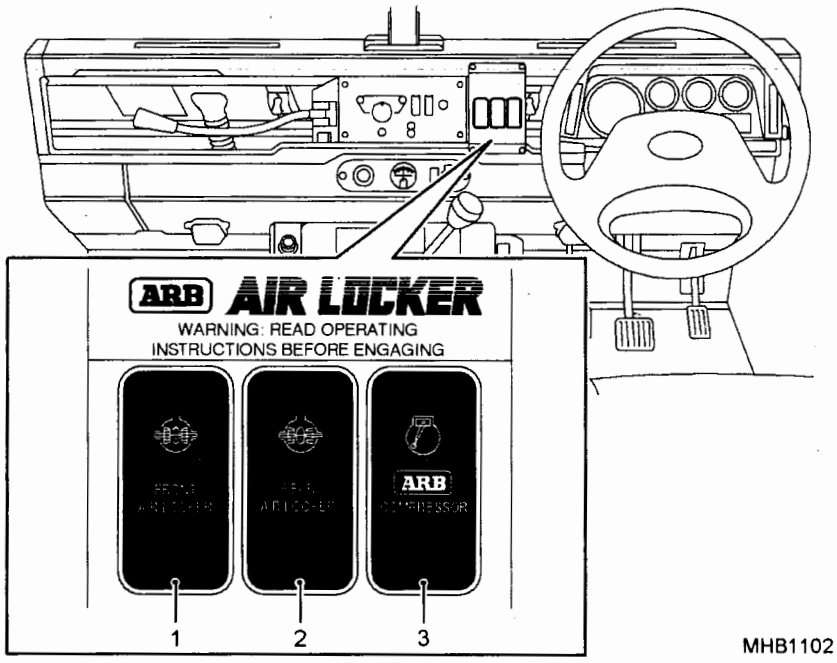

Fig 18 Air locker switches

CHAPTER 3-10

TROPICAL FIELD AMBULANCE

CONTENTS

Para

1 Introduction
2 General
AIR CONDITIONING
4 Temperature control switch
5 Blower motor fan speed control switch
6 Circuit breakers (WARNING)
7 Ventilator deflectors

Fig		Page
1	Air conditioning temperature control	2
2	Blower motor fan speed control switch	3
3	Ventilation deflectors	5/6

INTRODUCTION

1 This sub-chapter describes all the items applicable to the Tropical Field Ambulance which are not covered in the previous chapters.

General

2 All information appertaining to these vehicles can be found in sub-chapter 3-3 Field Ambulance.

NOTES

To maximise the operation of the air conditioning system:

(1) The vehicles doors and windows should be kept closed as much as possible.

(2) The temperature control should be rotated to the maximum cold setting and the air fan switch to maximum speed.

(3) When the desired temperature is reached it should be regulated with both controls.

AIR CONDITIONING

3 The controls for the air conditioning system are located in the ambulance on the main control panel and the re-circulation grille. They consist of a temperature control switch, and a blower motor fan speed control. Air distribution is achieved via a series of vents located in a roof-mounted duct in the ambulance and in the drivers cab by vents mounted in the side of the evaporator unit.

TEMPERATURE CONTROL SWITCH

4 To operate the temperature control switch, located in the air outlet duct, (Fig 1), rotate clockwise to reduce the ambient temperature within the compartment.

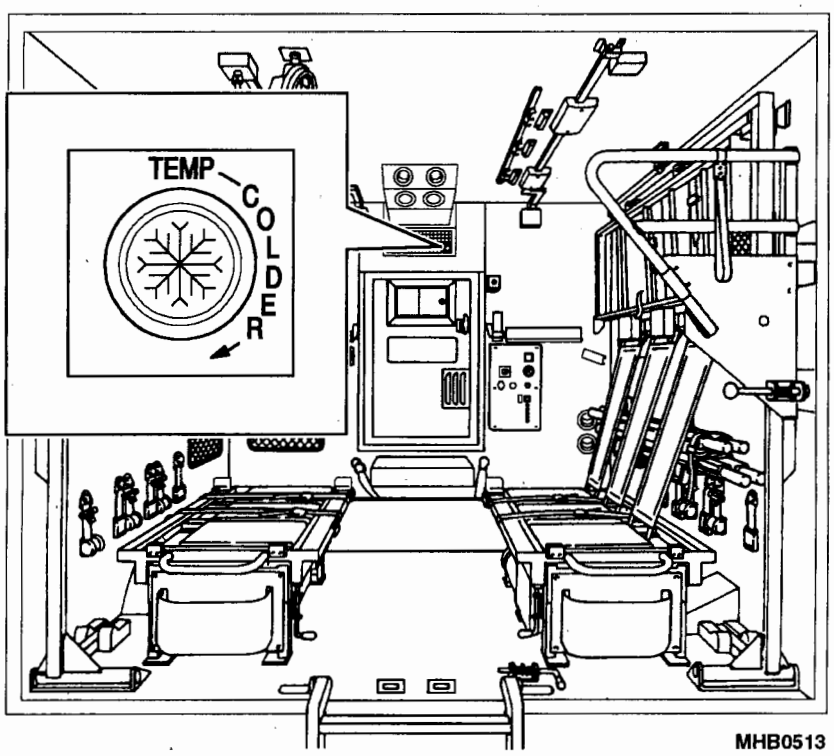

Fig 1 Temperature control switch

BLOWER MOTOR FAN SPEED CONTROL SWITCH

5 This is a rotary switch (Fig 2) with 4 settings as follows.

5.1 Off - the fan is non-operational.

5.2 Low - The fan operates at a low speed.

5.3 Med - The fan operates within the middle range

5.4 High - The fan operates at its optimum level.

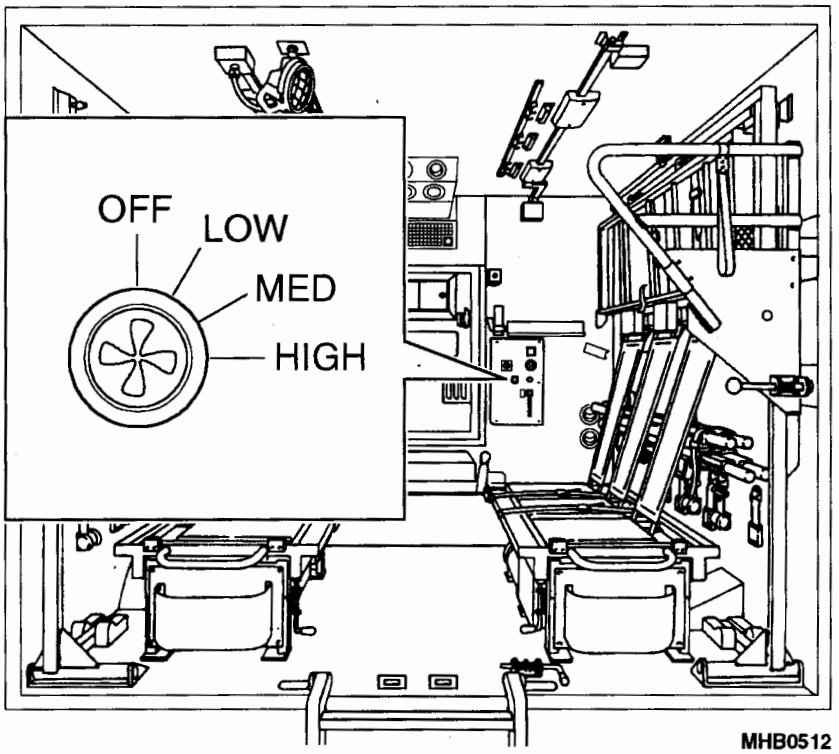

Fig 2 Blower motor fan speed control switch

CIRCUIT BREAKERS

WARNING

CIRCUIT BREAKERS. CB.3 MUST BE SWITCHED OFF WHEN 12V SUPPLY SOCKETS ARE NOT IN USE.

6 There are 5 circuit breakers (8) contained in the panel and they protect the following circuits.

6.1 CB.1 – Air conditioning

6.2 CB.2 – Blowers

6.3 CB.3 - 12 volt socket

6.4 CB.4 – Lights

6.5 CB.5 - 24 volt sockets

VENTILATION DEFLECTORS

7 Air distribution is achieved via a series of vents located in a roof mounted duct in the ambulance (rear body) and in the drivers front cab by vents mounted in the side of the evaporator unit. These vents can be adjusted to alter the direction of air flow (Fig 3).

WARNINGS

(1) DO NOT OPERATE THE SYSTEM WITH ALL OF THE VENTS CLOSED.

(2) DO NOT OPERATE THE SYSTEM IF THE RECIRCULATION GRILLE IS BLOCKED.

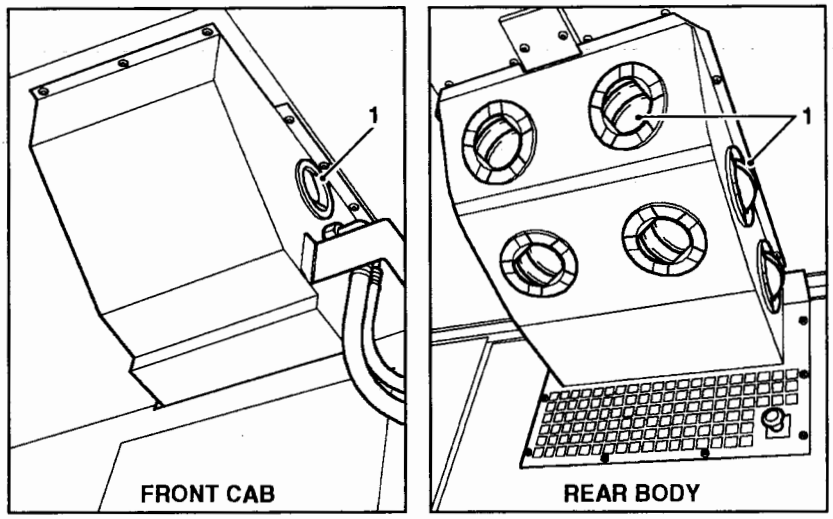

MHB1014

Fig 3 Ventilation deflectors

CHAPTER 3-11

WINTERISED/WATERPROOFED FIELD AMBULANCE

CONTENTS

Para

1 Introduction
2 General
3 Fuel filler flap

Fig Page

1 Fuel filler flap..... 2

INTRODUCTION

1 This sub-chapter describes all the items applicable to the Winterised/Waterproofed Field Ambulance vehicles, which are not covered in the previous chapters.

General

2 All information appertaining to the Winterised/Waterproofed Field Ambulance vehicles can be found in sub-chapter 3-3.

FUEL FILLER FLAP

3 The fuel filler flap protects the filler cap (Fig 1 (2)) from excessive cold and water penetration.

To open and close the flap

NOTE

When fastening the flap ensure that turnbuckle is secure.

4 Twist the turnbuckle (1) in the appropriate direction to release or fasten the flap.

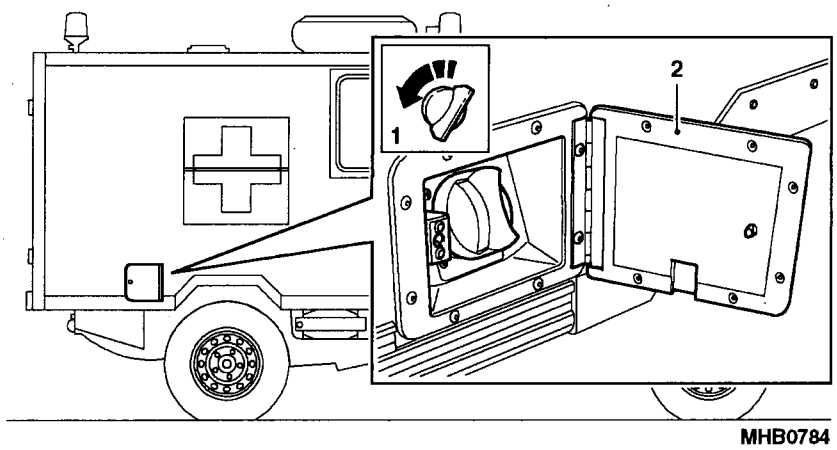

Fig 1 Fuel filler flap

CHAPTER 3-12

WATERISED
WEAPONS MOUNTED INSTALLATION KIT (WMIK)

CONTENTS

Para

1 Introduction
2 Raised air intake
3 Removable windscreen

Fig

1 Raised air intake 2
2 Removable windscreen 3

INTRODUCTION

1 This sub-chapter describes all the items applicable to the Waterised Truck Utility Medium (TUM) Weapons Mounted Installation Kit (WIK) vehicles, which are not covered in the previous chapters.

RAISED AIR INTAKE

2 The fixed raised air intake can be extended by the use of an extension tube. To fit the extension tube refer to Cat 421.

REMOVABLE WINDSCREEN

WARNING

HEAVY OBJECTS. THE REMOVABLE WINDSCREEN IS HEAVY. USE AN ASSISTANT WHEN REMOVING OR REFITTING THE SCREEN.

3 To remove the windscreen, carry out the following:

3.1 Remove the canopy side doors (if fitted).

3.2 Remove the windscreen wiper arms (Fig 1 (1)).

3.3 Slacken the cap nuts (2) on the windscreen clamps.

3.4 Pull the clamps out of the brackets and rotate clear of the windscreen.

3.5 Remove the two fixings (3) securing the clamp brackets to the bulkhead on both sides of the windscreen.

3.6 With the aid of an assistant lift the windscreen clear of the vehicle.

3.7 Collect the hinge gaskets from both sides of the bulkhead mountings.

3.8 Stow the windscreen and its components in a safe place.

4 Refit the windscreen in the reverse order of the removal.

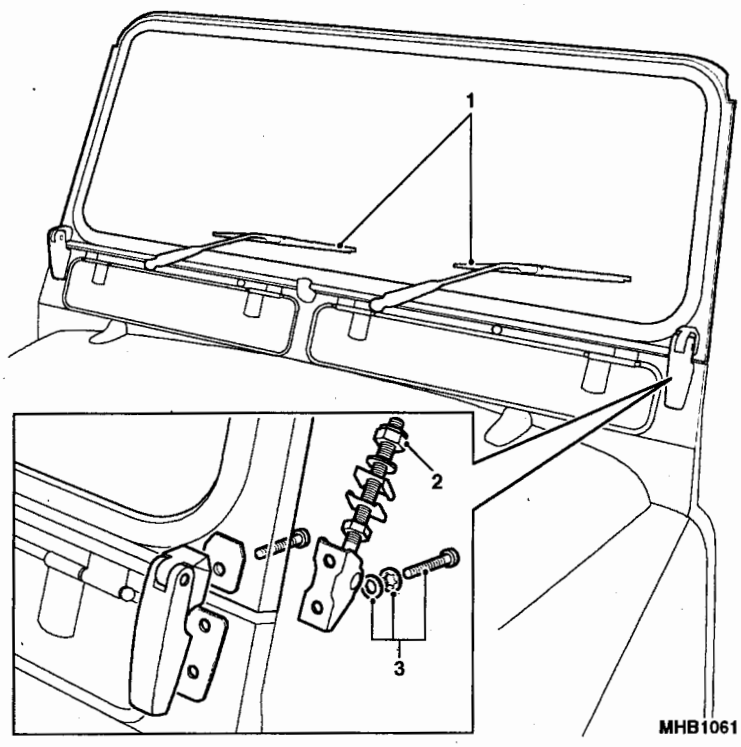

Fig 2 Removable windscreen

SPARE WHEEL CARRIER

5 Where it has been approved by the Equipment Manager at DLO, an additional spare wheel carrier may be fitted to the opposite side of the vehicle using existing in service equipment and a long arm mirror. To remove and refit the spare wheel refer to Chapter 4-1.

CHAPTER 4

USER MAINTENANCE

CONTENTS

Para

1 Introduction
2 General

INTRODUCTION

1 This chapter describes the User Maintenance applicable to Truck Utility Light (TUL) HS, Truck Utility Medium (TUM) HS and (TUM) Ambulance HS variants listed in the following sub-chapters:

1.1 Chapter 4-1 Basic vehicle

1.2 Chapter 4-2 Fitted For Radio (FFR)

1.3 Chapter 4-3 Field Ambulance

1.4 Chapter 4-4 Winterised/Waterproofed

1.5 Chapter 4-5 Winterised

1.6 Chapter 4-6 Air drop

1.7 Chapter 4-7 Helicopter Support Platform

1.8 Chapter 4-8 Commanders IK

1.9 Chapter 4-9 Weapons Mounted Installation Kit

1.10 Chapter 4-10 Tropical Field Ambulance

1.11 Chapter 4-11 Winterised/Waterproofed Field Ambulance

1.12 Chapter 4-12 Waterised Weapons Mounted Installation Kit

General

2 The information given in this chapter is applicable to both left and right hand drive vehicles.

CHAPTER 4-1

BASIC VEHICLE

CONTENTS

Para

1 Introduction
2 General
3 Bulbs (CAUTION)
4 Map reading light
5 Warning light
6 Instrument panel
7 Hazard warning light
8 Convoy light
9 Side, tail/stop, front turn lights
10 Rear fog, rear turn and reverse lights
11 Rear number plate light
12 Headlights (CAUTION)
13 Side repeater lights
14 Fuse boxes (WARNING)
To change a fuse (20 Way fuse box only)
To change a fuse (Under bonnet fuse box only) (WARNING)
15 Coopers air cleaner
16 To check the dump valve
17 To renew the air cleaner element
18 Donaldson air cleaner
19 To check the dump valve
20 To renew the air cleaner elements
21 Fuel filter
To drain the filter
To renew the filter
22 Fuel sedimenter
23 To drain the sedimenter
24 To clean the element
25 Brake fluid reservoir (CAUTION)
26 Brake reservoir level sensor
Topping up with fluid
27 Clutch fluid reservoir
28 Power steering reservoir
30 Engine (WARNINGS) (CAUTION)
31 To check the engine oil level

(continued)

CONTENTS (continued)

32 Engine oil change
Changing the engine oil
33 Gearbox
To check/top up the gearbox
To change the gearbox oil
34 Transfer gearbox
To check/top up the transfer gearbox
To change the transfer gearbox oil
35 Front and rear differential axles
To check/top up the differential axle
To change the differential axle oil
36 Swivel pin housing
39 Batteries
Checking the batteries
40 Axle breathing system (CAUTION)
Cleaning the axle breather pipes
41 Propeller shafts
Lubricating the propeller shafts
42 Windscreen wiper blades
43 Jacking the vehicle (WARNINGS)
To jack up the front wheel
To jack up the rear wheel
44 Wheel changing (WARNINGS)(CAUTION)
To change a roadwheel
45 Spare wheel (WARNING)
To remove the spare wheel
To replace the spare wheel
47 Spare wheel lifting harness (WARNING)
Spare wheel lifting harness - Side mounted spare wheel
Spare wheel lifting harness - Rear mounted spare wheel
49 Engine cooling system (WARNING) (CAUTIONS)
50 Expansion tank
51 Cooling system protection
52 Flushing the engine cooling system
53 Engine oil filler cap
54 Windscreen washer reservoir
To top up the reservoir
55 Drive belt
To remove the serpentine belt
To fit the serpentine belt
57 Daily and weekly checks
Daily checks
Weekly checks

(continued)

CONTENTS (continued)

Fig		Page
1	Map reading light	5
2	Warning lights	6
3	Instrument panel lights	7
4	Hazard warning light switch	8
5	Convoy light	9
6	Side, tail, stop and front turn lights	10
7	Rear fog, rear turn and reverse lights	11
8	Rear number plate light	12
9	Headlights	14
10	Side repeater lights	15
11	20 Way fuse box	16
12	Under bonnet fuses	16
13	To check the dump valve - Coopers	17
14	To renew the air cleaner element - Coopers	18
15	To check the dump valve - Donaldson	20
16	To renew the Donaldson air cleaner elements - Donaldson	21
17	To drain the filter	22
18	To renew the filter	23
19	To drain the sedimenter	24
20	To clean the element	25
21	Brake fluid reservoir	26
22	Clutch fluid reservoir	27
23	Power steering reservoir	28
24	Checking the engine oil level	30
25	Draining the sump	31
26	Engine oil filter	32
27	Engine oil filler cap	32
28	Gearbox filler/level plug	33
29	Gearbox drain plug	34
30	Transfer gearbox filler plug	34
31	Transfer gearbox filler/drain plugs	35
32	Rover differential axle filler/drain plugs	36
33	Rover heavy duty differential axle filler/drain plugs	36
34	Swivel pin housing filler/drain plugs	37
35	Batteries	38
36	Axle breathing system	39
37	Propeller shafts	40
38	Windscreen wiper blades	41
39	Tightening sequence for wheel nuts	45
40	Removing the spare wheel	46

(continued)

CONTENTS (continued)

Fig		Page
41	Removing the spare wheel (Bowman mount)	47
42	Removing the side mounted spare wheel using the lifting harness	49
43	Lowering the side mounted spare wheel using the lifting harness	50
44	Lowering the rear mounted spare wheel using the lifting harness	52
45	Rear mounted lifting harness	52
46	Expansion tank	54
47	Radiator and expansion tank	55
48	Cylinder block drain plug	56
49	Engine oil filler cap	57
50	Windscreen washer reservoir	58
51	Serpentine belt drive	59

INTRODUCTION

1 This Sub-Chapter describes all the user maintenance applicable to the Truck Utility Light (TUL) HS and Truck Utility Medium (TUM) HS vehicles.

General

2 All the service intervals for the subsequent paragraphs are to be found in the following document: (CAT 601 Table 4 and 5). For the most efficient use of the vehicles, the service intervals should be adhered to.

BULBS

CAUTION

24 VOLT. All the bulbs incorporated in the vehicle are of the heavy duty 24 Volt type and should be changed immediately they have failed. Failure to do so will result in operating in an unreliable condition e.g. warning lights not indicating failure especially with the brakes, vehicle charging and 24 volt charging circuits.

3 The bulbs are either the push or the bayonet types. The appropriate bulb ratings are to be found in the "User Spares Data" (Chapter 5). The following paragraphs describe how to replace all the bulbs on the vehicle.

Map reading light

4 The map reading light is situated to the left of the main lighting switch, in front of the passenger seat.

4.1 Disconnect the negative earth lead from the battery.

4.2 Carefully unscrew the bulb guard (Fig 1 (1)) from the end of the light unit.

4.3 Push and twist against spring pressure to remove the bulb and discard.

4.4 Insert a new bulb.

4.5 Refit the bulb guard on to the light unit.

4.6 Reconnect the negative earth lead to the battery.

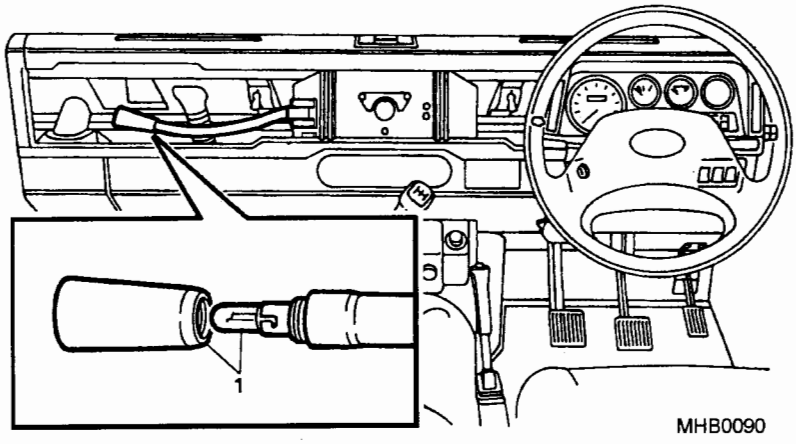

Fig 1 Map reading light

Warning lights

5 The warning lights panel is an integral part of the instrument panel which is situated in front of the steering wheel console and contains eleven bulbs.

5.1 Disconnect the negative earth lead from the battery.

5.2 Remove the two screws (Fig 2 (1)) retaining the warning lights panel and ease the panel forward to gain access to the bulbs.

5.3 Remove the appropriate plug connector (2) from the rear of the warning lights panel.

5.4 Twist the bulb holder (3) (5) and pull it from its socket.

5.5 Pull the bulb (4) (6) from its holder and discard.

5.6 Fit a new bulb and replace the holder into its socket.

5.7 Replace the plug connector and carefully fit the warning lights panel.

5.8 Secure with the two screws to the instrument panel.

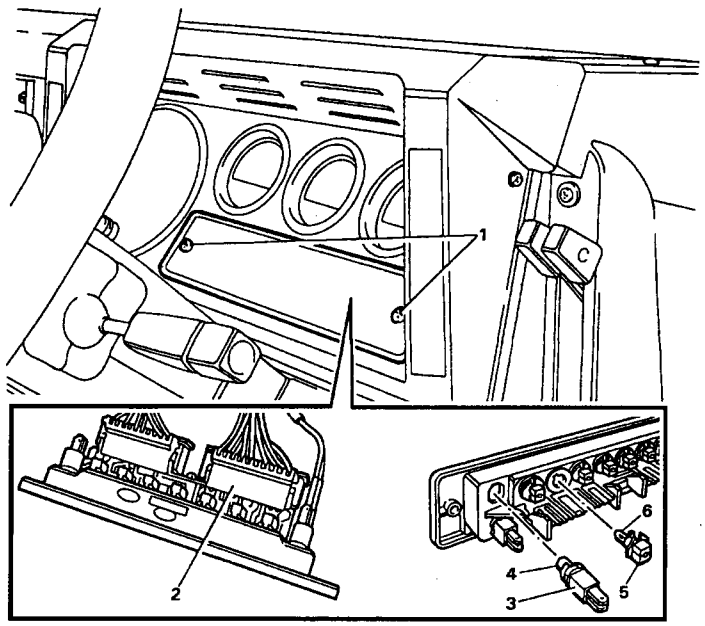

Fig 2 Warning lights

Instrument panel

6 The instrument panel is situated in front of the steering wheel console and contains three bulbs.

6.1 Disconnect the negative earth lead from the battery.

6.2 Remove the four screws (Fig 3 (1)) retaining the instrument panel and ease the panel forward to gain access to the bulbs.

NOTE

If required remove the drive cable from the speedometer to make access easier.

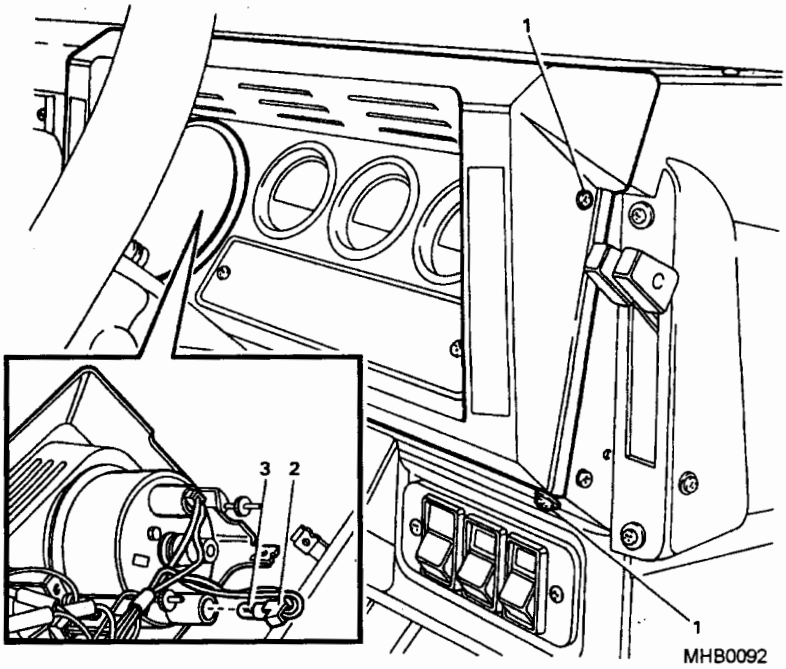

Fig 3 Instrument panel lights

6.3 Twist and pull the bulb holder (2) from its socket.

6.4 Pull the bulb (3) from its holder and discard.

6.5 Fit a new bulb and replace the holder into its socket.

6.6 Reconnect the speedometer drive cable if removed, then replace the instrument panel carefully, so as not to twist or damage the wiring at the rear.

6.7 Secure the panel with the four screws.

6.8 Reconnect the negative earth lead to the battery.

Hazard warning light

7 The hazard warning switch is located below and to the right of the instrument panel.

7.1 Disconnect the negative earth lead from the battery.

7.2 Ease the hazard switch cover (Fig 4 (1)) off.

7.3 Ease the bulb (2) from its holder within the switch and discard.

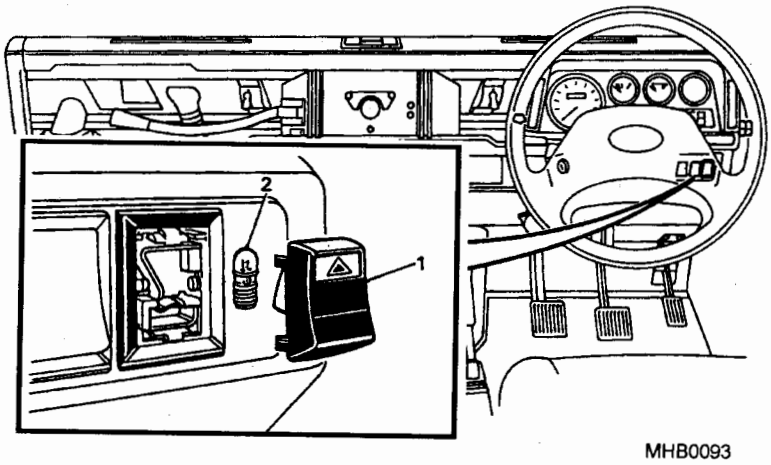

Fig 4 Hazard warning light switch

7.4 Fit a new bulb into its housing and refit the cover.

7.5 Reconnect the negative earth lead to the battery.

Convoy light

8 The convoy light is situated underneath and to the rear of the vehicle. It is located on the right hand chassis member.

8.1 Disconnect the negative earth lead from the battery.

8.2 Clean the exterior of the light (Fig 5 (1)) if dirty so access can be made more easily.

8.3 Unscrew the retaining cap (3) and remove the bulb holder from the convoy light.

8.4 Press and twist to release the bulb (2) from the holder and discard.

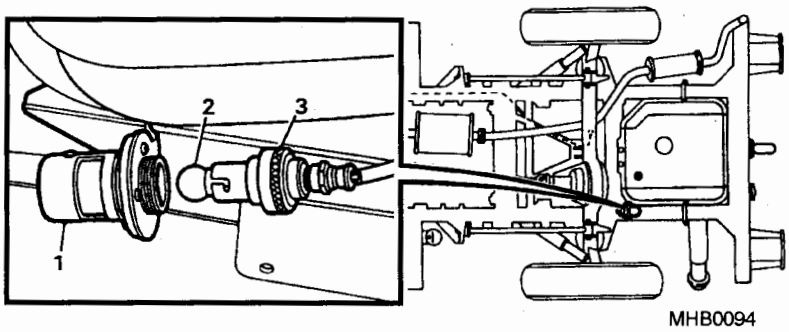

Fig 5 Convoy light

8.5 Fit a new bulb into the holder.

8.6 Refit the bulb holder and secure by tightening the retaining cap.

8.7 Reconnect the negative earth lead to the battery.

Side, tail, stop, and front turn lights.

9 The side, tail, stop, and front turn lights are all of the same type and therefore the following instructions are common.

9.1 Disconnect the negative earth lead from the battery and release the front lamp guard.

9.2 Remove the two screws (Fig 6 (1)) and withdraw the light unit (2) from the vehicle.

9.3 Pull connector (5) from bulb holder (4).

9.4 Whilst holding the light unit (2) twist and withdraw the bulb holder (4) from the rear of the unit.

9.5 Push defective bulb (3) inwards, twist and withdraw it from the bulb holder.

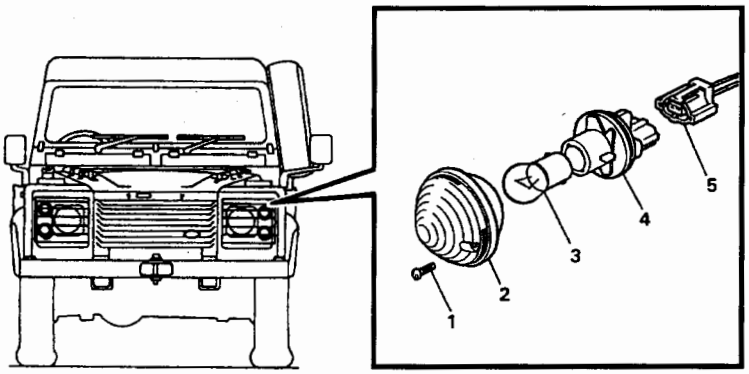

Fig 6 Side, tail, stop and front turn lights

9.6 Discard bulb.

9.7 Renew bulb.

9.8 Refit the light unit by reversing the order of removal.

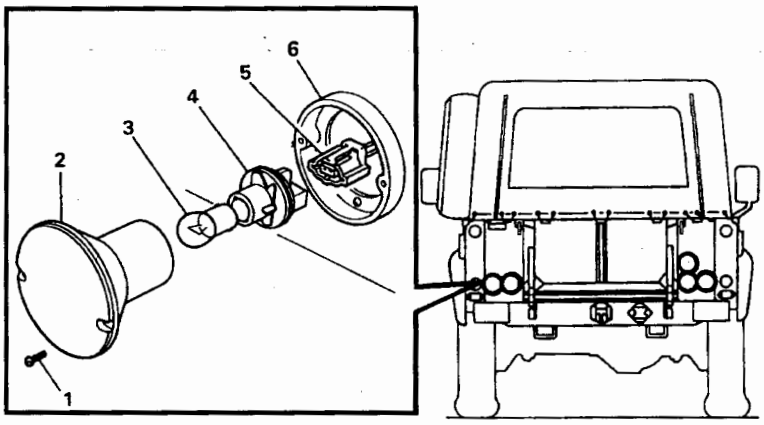

MHB0096

Fig 7 Rear fog, rear indicator and reverse lights

Rear Fog, rear turn and reverse lights

10 The rear fog, rear turn and reverse lights are of the same type and therefore the following instructions are common.

10.1 Disconnect the negative earth lead from the battery.

10.2 Remove the two screws (Fig 7 (1)) securing the light unit to the vehicle mounted spacer (6).

10.3 Pull connector (5) from bulb holder (4).

10.4 Whilst holding the light unit (2), twist the and withdraw the bulb holder (4) from the rear of the unit.

10.5 Push defective bulb (3) inwards, twist and withdraw it from the bulb holder.

10.6 Discard bulb.

10.7 Renew the bulb.

10.8 Refit the light unit by reversing the order of removal.

10.9 Reconnect the negative earth lead to the battery.

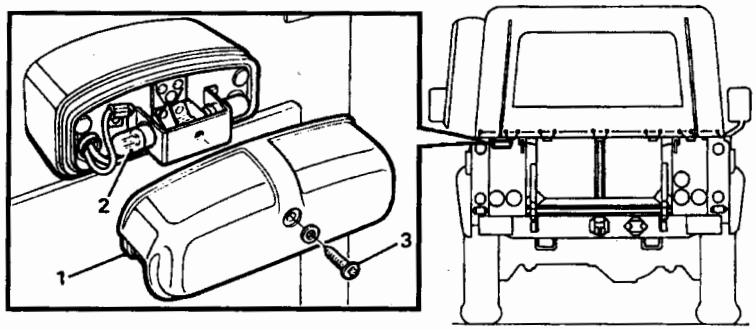

MHB0097

Fig 8 Rear number plate light

Rear number plate light

11 The rear number plate light has two bulbs; check that the correct bulb is replaced to ensure full working capacity.

11.1 Disconnect the negative earth lead from the battery.

11.2 Slacken the securing screw (Fig 8 (3)) and remove the cover from the light body (1).

11.3 Pull out the appropriate bulb (2) and discard.

11.4 Fit a new bulb into the holder.

11.5 Fit the cover and secure with the screw.

11.6 Reconnect the negative earth lead to the battery.

Headlights

12 The headlights contain quartz halogen bulbs and the procedure for renewing the bulb is as follows:

CAUTION

ADJUSTMENT SCREWS. Care must be taken not to disturb the headlight beam adjustment screws

12.1 Disconnect the negative earth lead from the battery.

12.2 Release the lamp guard from the front of the vehicle.

12.3 Prise the headlight unit (Fig 9 (2)) from the headlight beam adjustment screws (1) and remove. The headlight lens can now be removed.

12.4 Pull off the electrical connection (3) to the headlight, remove the rubber boot (5), release bulb retaining clip (5) and withdraw the bulb (6).

12.5 Fit new bulb and secure with retaining clip (5).

12.6 Clean the headlight and rubber boot of old grease and recoat with silicon grease.

12.7 Refit the rubber boot (4) and electrical connector (3).

12.8 Refit the headlight unit to the headlight beam adjustment screws (1).

12.9 Reconnect the negative earth lead to the battery.

12.10 Refit the lamp guard to the front of the vehicle.

NOTE

The lights should be checked using the specialised headlight alignment equipment available.

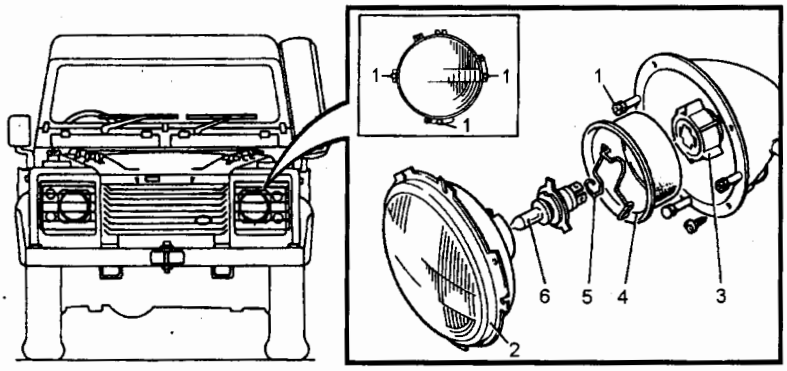

Fig 9 Headlights

Side repeater lights

13 The side repeater lights are located on either side of the vehicle wings mounted towards the front.

13.1 Disconnect the negative earth lead from the battery.

13.2 Push the lens (Fig 10 (1)) forward and pull outward to detach lens and bulb holder (2) from vehicle.

13.3 Pull the bulb (3) from the holder without turning and renew.

13.4 Refit the repeater light in the reverse order of removal.

13.5 Reconnect the negative earth lead to the battery.

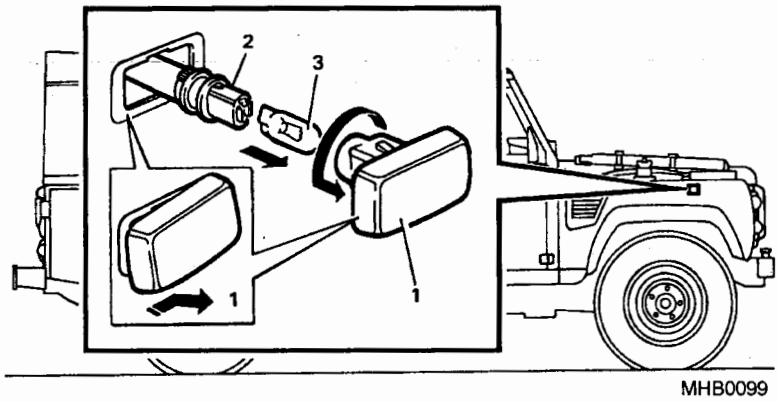

Fig 10 Side repeater lights

FUSE BOXES

WARNING

VEHICLE PROTECTION. THE UNDERBONNET FUSEBOX CONTAINS FUSES WHICH PROTECT THE VEHICLE MAIN HARNESSES. SHOULD ANY OF THESE FUSES FAIL THE VEHICLE SHOULD BE TAKEN TO THE WORKSHOP AND THE FAULT RECTIFIED IMMEDIATELY.

14 There are two fuse boxes containing all the vehicles fuses. The 20 Way fuse box is located inside the vehicle below the fascia, in front of the main gear lever and the second fuse box is located to the rear of the engine compartment. To change a fuse proceed as follows:

14.1 20 Way fuse box only. Disconnect the negative earth lead from the battery.

14.2 Undo the fixings (Fig 11 (1)) and remove the fuse box cover (2).

14.3 Replace the failed fuse (3), ensuring the correctly rated one is fitted. (Check the fuse label inside the cover for the correct rating).

14.4 Fit the fuse cover and secure with the two fixings.

14.5 Reconnect the negative earth lead to the battery.

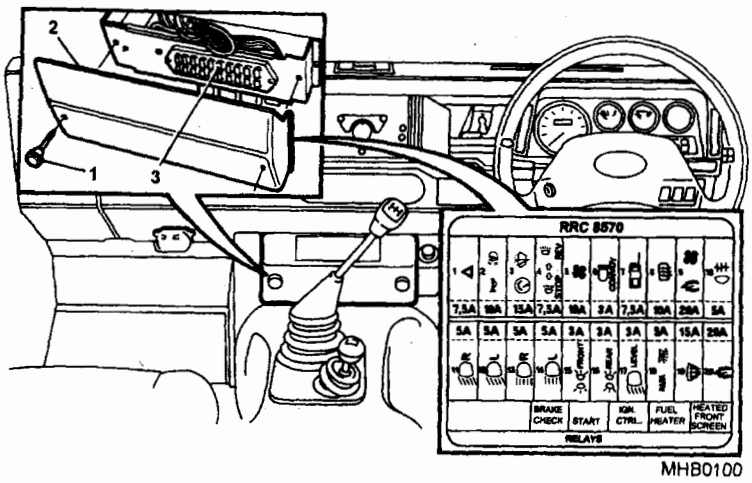

Fig 11 20 Way fuse box

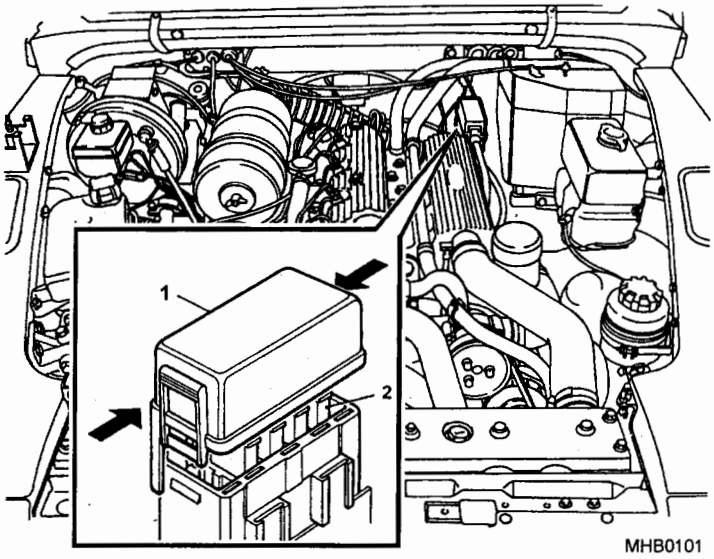

Fig 12 Under bonnet fuse box

WARNING

FUSES THESE FUSES PROTECT THE MAIN HARNESS, IF ANY OF THESE FUSES FAIL REPORT IT IMMEDIATELY. TO CONTINUE WOULD RESULT IN SERIOUS DAMAGE.

14.6 Under bonnet fuse box only. Disconnect the negative earth lead from the battery.

14.7 Remove the fuse box cover (Fig 12 (1)).

14.8 Replace the failed fuse (2), ensuring the correctly rated one is fitted. (Check the fuse label inside the cover for the correct rating).

14.9 Fit the fuse cover and secure.

14.10 Reconnect the negative earth lead to the battery.

COOPERS AIR CLEANER

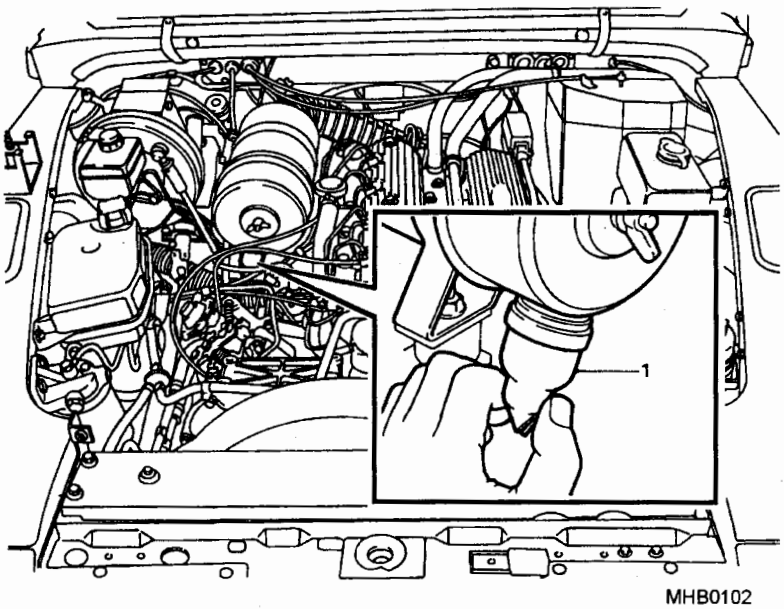

Fig 13 To check the dump valve - Coopers

15 The air cleaner is situated in the engine compartment on the right hand side.

To check the dump valve - Coopers

16 The dump valve provides an automatic drain for the air cleaner, and is fitted to the base of the air cleaner.

16.1 Squeeze open the dump valve (Fig 13 (1)) and check that the interior is clean.

16.2 Check that the rubber is flexible and in good condition.

16.3 If necessary, remove the dump valve to clean the interior.

16.4 Fit a new valve if the original one is in poor condition.

16.5 Under heavy conditions such as dusty, deep wading or field, attention must be more frequent.

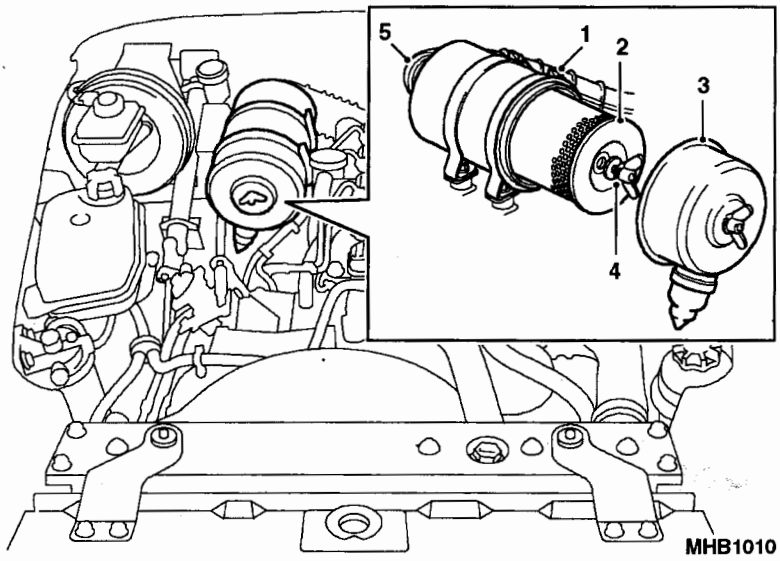

Fig 14 To renew the air cleaner element - Coopers

To renew the air cleaner element - Coopers

17 The air cleaner element is integral to the cleaner.

17.1 Slacken the clip (Fig 14 (1)) and if required, disconnect the hose (5) from the air cleaner.

17.2 Pull up the clips and raise the air cleaner from the cradle.

17.3 Undo the external wing nut and remove the end cover (3).

17.4 Undo the internal wing nut and seal assembly (4) remove the element (2) and discard.

17.5 Fit a new element and secure with the wing nut and seal assembly.

17.6 Fit the end cover and secure with the wing nut.

17.7 Place air cleaner back in cradle and secure with clips.

17.8 Fit the hose to the cleaner and secure with the clip.

DONALDSON AIR CLEANER

18 The air cleaner is situated in the engine compartment on the right hand side.

To check the dump valve - Donaldson

19 The dump valve provides an automatic drain for the air cleaner, and is fitted to the base of the air cleaner.

19.1 Squeeze open the dump valve (Fig 15 (1)) and check that the interior is clean.

19.2 Check that the rubber is flexible and in good condition.

19.3 If necessary, remove the dump valve to clean the interior.

19.4 Fit a new valve if the original one is in poor condition.

19.5 Under heavy conditions such as dusty, deep wading or field, attention must be more frequent.

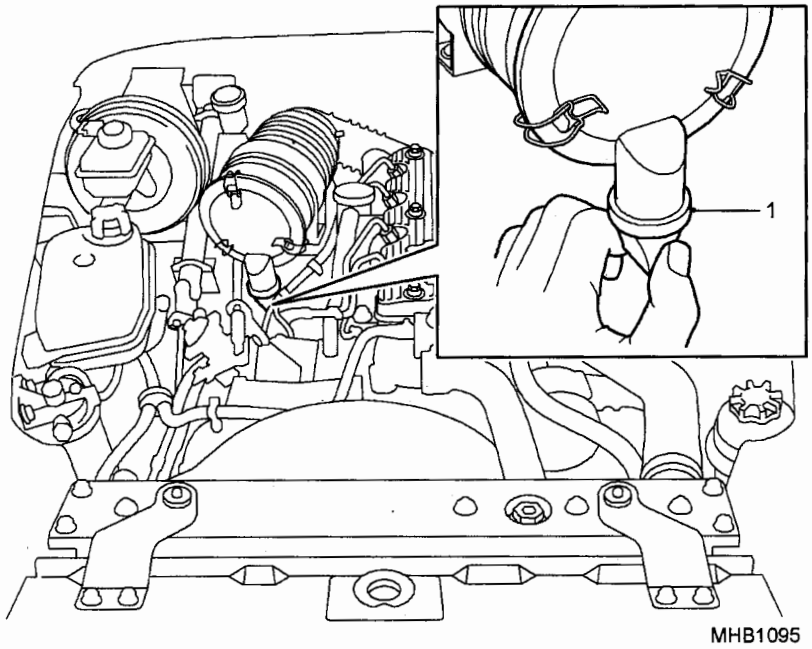

Fig 15 To check dump valve - Donaldson

To renew the air cleaner elements - Donaldson

20 The air cleaner element is integral to the cleaner.

20.1 Release the two screws (Fig 16 (7)), washers (8) and springs (9) securing the air cleaner (2) to the retaining clip (1).

20.2 Release the air cleaner from the retaining clip.

20.3 Release the catches (fig 4 (4)) and remove the end cover (4).

20.4 Using a slight rocking motion pull out the outer element (3) and then the inner element (6) from the air cleaner body (2).

20.5 Fit new inner and outer elements ensuring the elements are seated correctly inside the air cleaner body.

20.6 Fit the end cover and secure the catches.

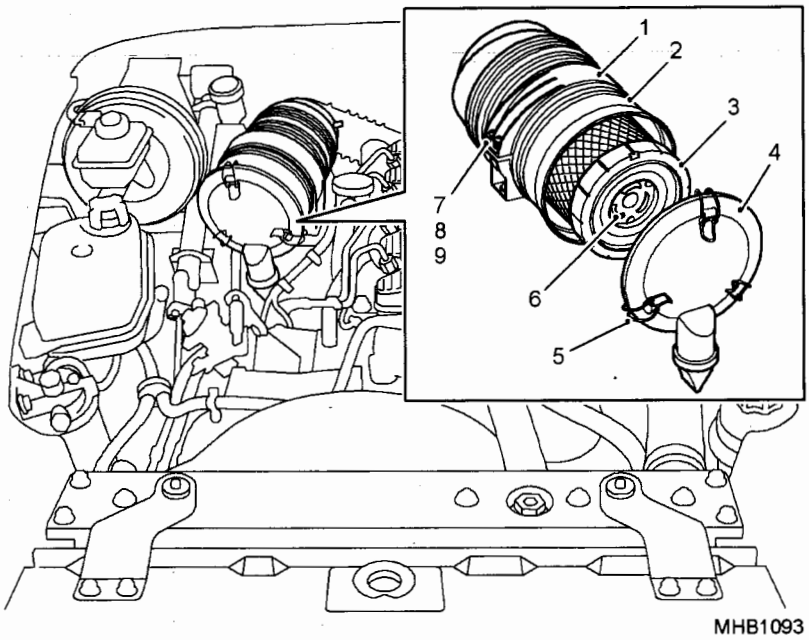

Fig 16 To renew the air cleaner elements - Donaldson

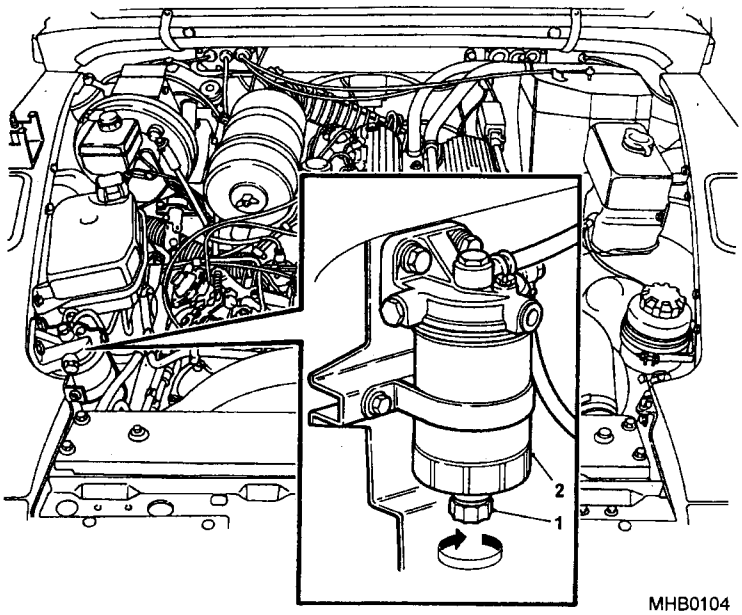

Fig 17 To drain the filter

FUEL FILTER

21 The fuel filter is mounted on the right hand inner wing of the engine compartment.

21.1 Draining the filter. Slacken the drain plug (Fig 17 (1)) at the bottom of the filter (2) to allow the water to run out.

21.2 When pure diesel fuel is emitted, tighten the drain plug and wipe any excess away.

21.3 Check for any seepage around the drain.

21.4 Renewing the filter. Supporting the filter canister, (Fig 18 (2)) unscrew the bolt (1) on the top of the filter.

21.5 Undo the two bolts (3) holding the bracket (4) and remove the bracket.

21.6 Remove the filter canister.

21.7 Remove the element (5) and discard.

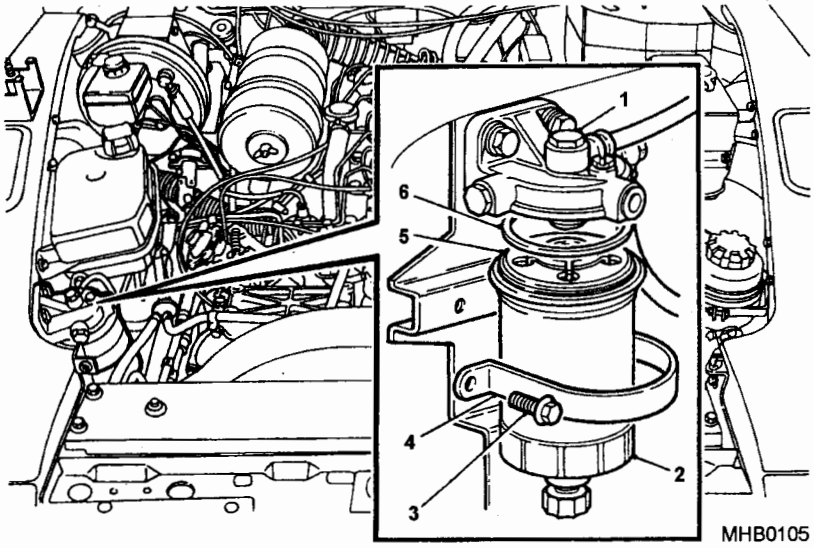

Fig 18 To renew the filter

21.8 Check and renew the large and small rubber washers (6) in the filter top, also the large rubber washer in the filter canister if necessary.

21.9 Wash the filter canister in petrol, fluid oil or equivalent.

21.10 Fit the new element onto the filter top spigot with the holes of the element facing to the top.

21.11 Fit the filter canister and secure with the bolt on the top of the filter.

FUEL SEDIMENTER

22 The sedimenter is positioned in a different location for the TUL as against the TUM. On the TUL the sedimenter is attached to the chassis frame, on the right-hand side in front of the rear wheel. On the TUM the sedimenter is attached to the chassis frame, on the right-hand side forward of the rear wheel.

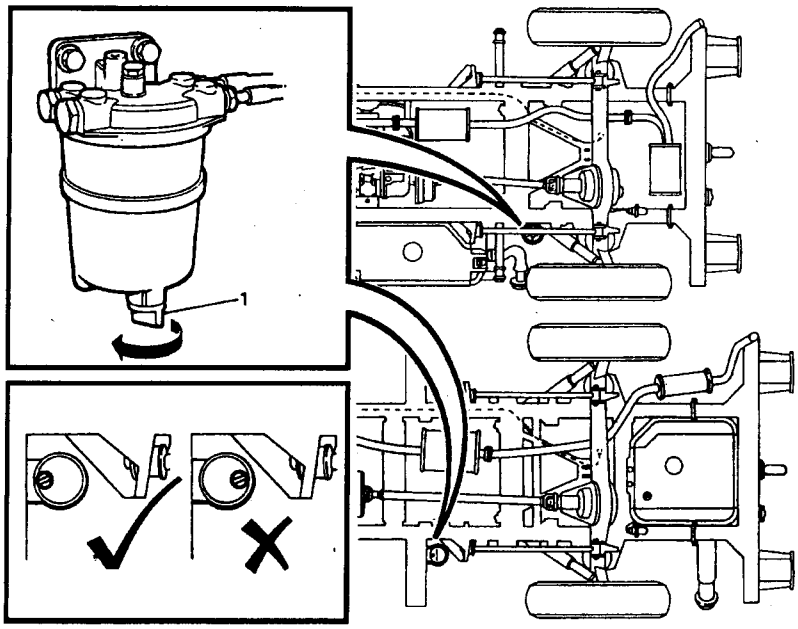

Fig 19 To drain the sedimenter

To drain the sedimenter

23 Locate the drain tap (Fig 19 (1)) at the bottom of the sedimenter and slacken off until pure diesel fuel is emitted then close tap.

To clean the element

24 Disconnect the fuel inlet pipe from the sedimenter and raise the pipe above the level of the fuel tank supporting it in this position to prevent fuel draining from the tank.

24.1 Support the bowl (Fig 20 (1)) and unscrew the bolt (4) on top of the unit and remove.

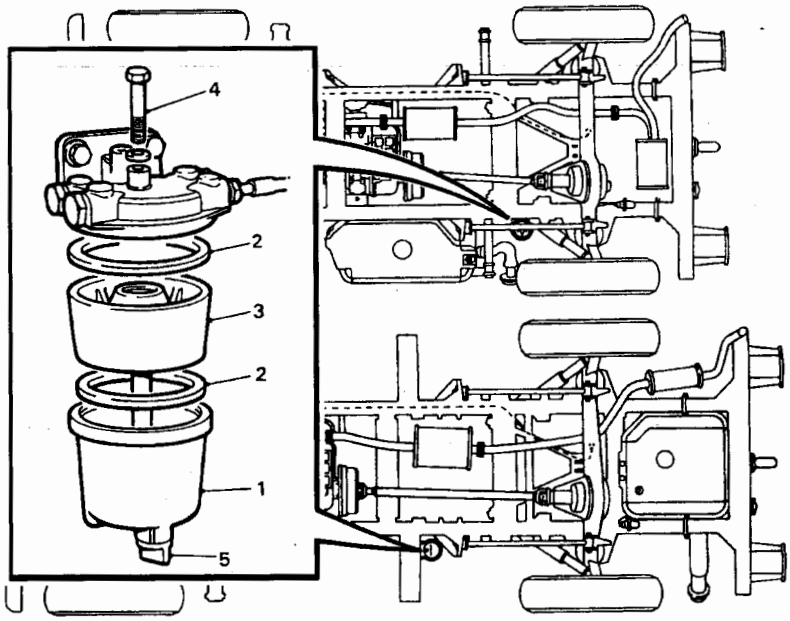

Fig 20 To clean the element

24.2 Remove the bowl, element (3) and seals (2).

24.3 Discard the seals and clean all the other parts in kerosene or an equivalent fluid.

24.4 Reassemble the sedimenter fitting new seals.

24.5 Slacken off the drain tap (5) until pure diesel fuel is emitted then close tap.

24.6 Start the engine and check the sedimenter for leaks.

NOTE

Ensure filter bowl is fitted with the drain tap rotated towards the front of the vehicle (see Fig 19, TUM only).

BRAKE FLUID RESERVOIR

CAUTION

CARE. When topping-up a reservoir, care must be taken to ensure that fluid does not come in contact with any paintwork on the vehicle.

25 The tandem brake fluid reservoir is integral with the servo unit and the master cylinder.

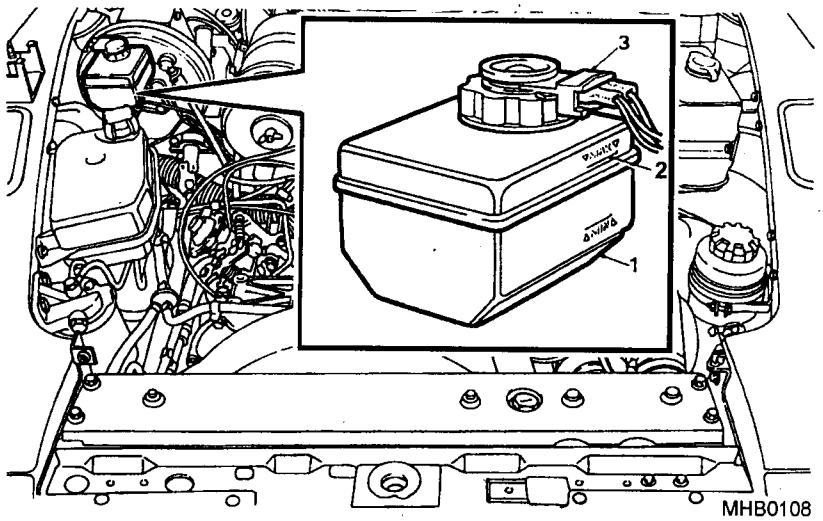

Fig 21 Brake fluid reservoir

Brake reservoir level sensor

26 The reservoir cap has a fluid level sensor built into it, this informs the driver via the warning light when the brake fluid is low.

26.1 Topping up with fluid. Hold the centre terminal block (Fig 21 (3)) stationary and undo the reservoir cap.

26.2 Check the fluid level in the reservoir. The level is indicated on the translucent reservoir body (1).

26.3 Top up to the "max" mark (2) with the specified fluid.

26.4 Replace the filler cap and secure.

NOTE

If a significant topping-up is required, check the master cylinder, callipers and brake pipes for leakage's; any leakage must be reported immediately for rectification.

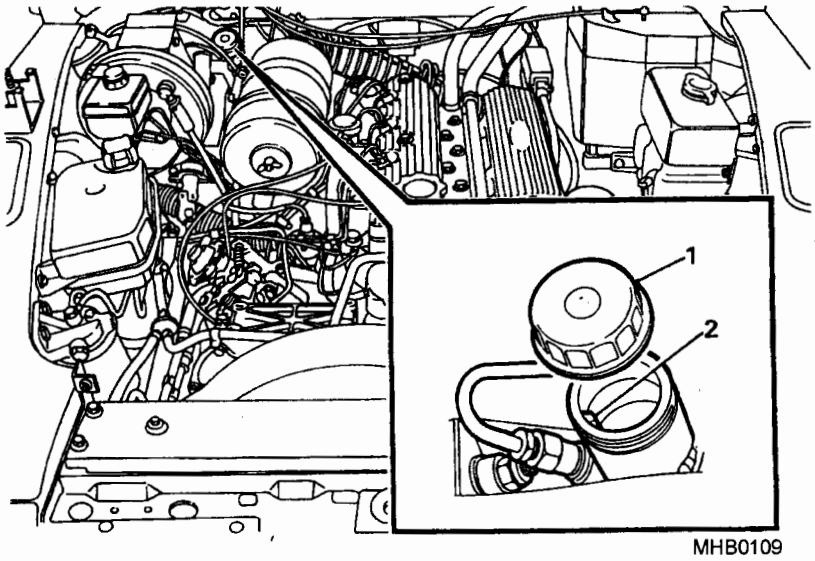

Fig 22 Clutch fluid reservoir

CLUTCH FLUID RESERVOIR

27 The clutch fluid reservoir is mounted on the left-hand side of the brake fluid reservoir within the engine compartment. To top-up proceed as follows:

27.1 Remove the cap (Fig 22 (1)) and check the level.

27.2 If low, top-up with the specified fluid to the fluid level mark (2).

27.3 If significant topping-up is required, check for leaks at the master cylinder, slave cylinder and connecting pipes.

27.4 Replace the filler cap and secure.

POWER STEERING RESERVOIR

28 The power steering reservoir is located on the left hand inner wing in the engine bay. The fluid level can be observed through the translucent reservoir body and should be checked as follows:

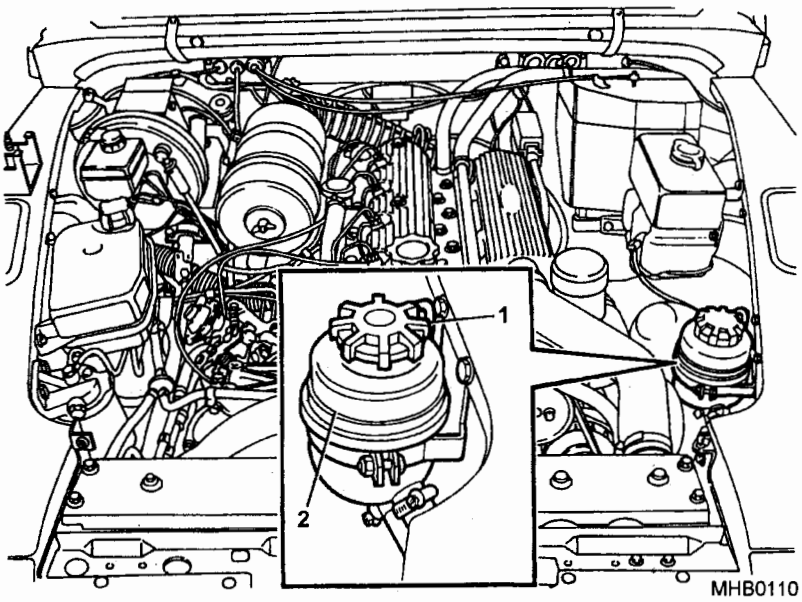

Fig 23 Power steering reservoir

29 Check that the fluid is up to the high mark (Fig 23 (2)) on the reservoir, if low remove the reservoir cap (1) and top up to the correct level with the specified oil.

NOTE

Clean the area around cap and top of reservoir before removing cap to ensure no dirt enters the reservoir and contaminates the fluid.

29.1 Refit the reservoir cap and clean any surplus oil away.

ENGINE

WARNINGS

(1) HEALTH. PROLONGED AND REPEATED CONTACT WITH USED ENGINE OILS MAY CAUSE SERIOUS SKIN DISORDERS, INCLUDING DERMATITIS AND CANCER.

(2) CLEANLINESS. AVOID EXCESSIVE CONTACT AND WASH THOROUGHLY AFTER CONTACT.

CAUTION

OIL LEVEL. The oil level must never be above the "FULL" mark as engine damage may be caused.

30 The engine oil is checked by using the dipstick which is located on the left-hand side of the engine.

NOTE

Whenever possible the oil level should be checked with the engine hot.

To check the engine oil level

31 To check the oil level when the engine is hot proceed as follows:

31.1 The vehicle must be sited on level ground.

31.2 Wait at least fifteen minutes after the engine has stopped.

31.3 Withdraw the dipstick, (Fig 24 (1)) wipe clean and re-insert into its tube, ensuring it is pushed fully home.

31.4 Withdraw the dipstick and take note of the oil level (2).

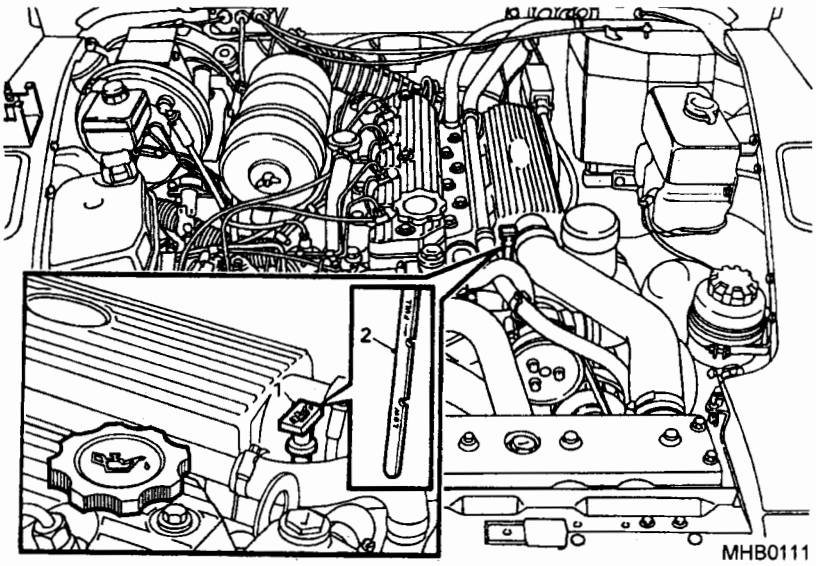

Fig 24 Checking the engine oil level

31.5 If the oil level is low add the appropriate amount of oil and re-check the level after five minutes.

31.6 To check the oil level when the engine is cold proceed as follows:

31.7 The vehicle must be sited on level ground.

31.8 DO NOT START THE ENGINE

31.9 Proceed to check the oil level as in paragraphs 31.3 to 31.4.

31.10 If the oil level is low add the appropriate amount of oil.

31.11 If it is necessary to recheck the oil, or if the engine has been started without being thoroughly warmed up, wait at least forty minutes to confirm that the oil level is correct.

Engine oil change

32 When changing the engine oil, the engine oil filter should be changed at the same time.

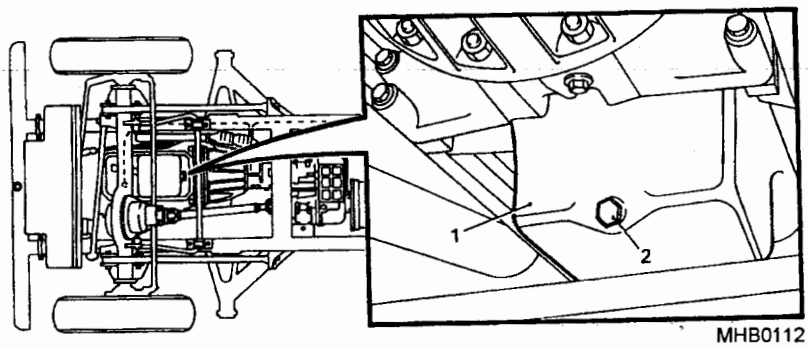

Fig 25 Draining the sump

32.1 Changing the engine oil. Run the engine, to warm up the oil, and then disconnect the negative earth lead from the battery.

32.2 Place a suitable container under the engine sump (Fig 25 (1)).

32.3 Remove the drain plug (2) in the sump and allow the oil to drain away completely then replace the plug.

32.4 Remove the filter (Fig 26 (1)) using a strap spanner.

32.5 Place the new rubber washer (2) on to the filter and fit the new filter on to the adapter.

32.6 Remove the engine oil filler cap (Fig 27 (1)) located on top of the rocker box.

32.7 Fill the engine with the correct quantity of the specified oil through the top of the rocker box cover.

32.8 Replace the engine oil filler cap.

32.9 Reconnect the negative earth lead to the battery, then run the engine checking for leakage's at the filter joint and the sump drain plug.

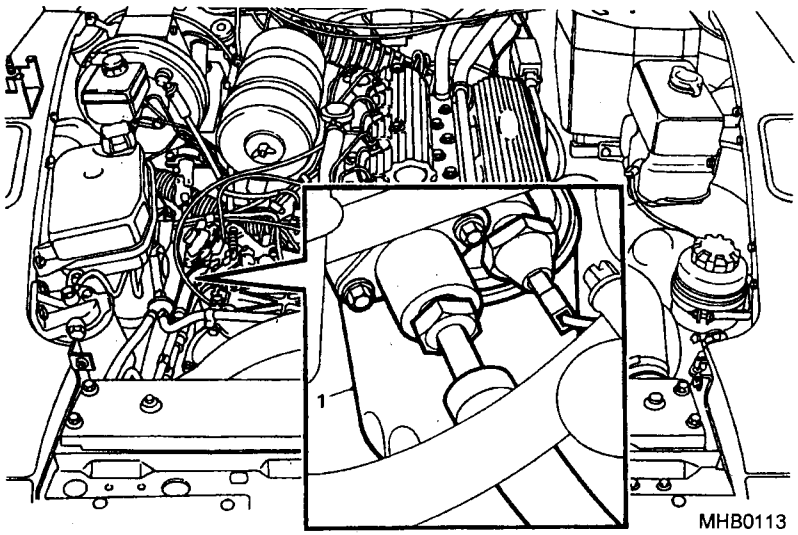

Fig 26 Engine oil filter

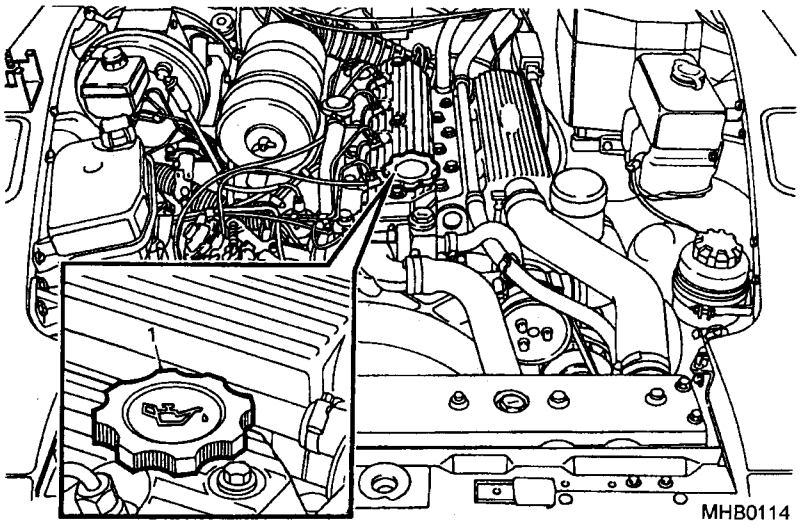

Fig 27 Engine oil filler cap

GEARBOX

33 The gearbox drain and filler plugs are situated under the vehicle.

33.1 To check/top up the gearbox. Locate the filler plug (Fig 28 (1)) on the right-hand side of the gearbox and undo.

33.2 Top up with the specified oil until it begins to run out of the filler/hole.

33.3 Fit and tighten the gearbox filler/level plug and clean any surplus oil away.

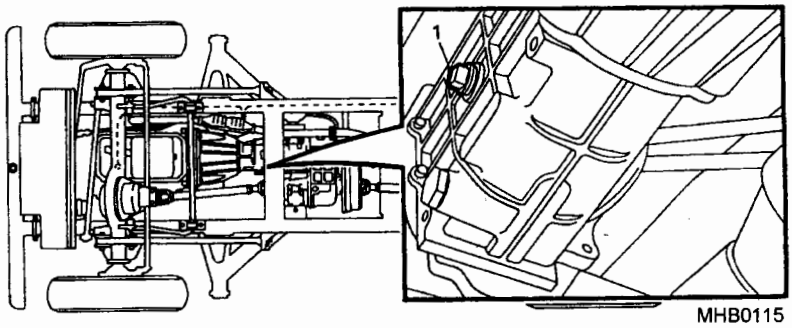

Fig 28 Gearbox filler/level plug

33.4 To change the gearbox oil. Place a suitable container under the gearbox drain plug.

33.5 Remove the gearbox case drain plug (Fig 29 (1)) and allow the oil to drain completely.

33.6 Using a new washer, fit the drain plug ensuring it is secure.

33.7 Fill the gearbox with the specified oil until the oil begins to run out of the filler/level hole (2).

33.8 Fit and tighten the gearbox filler/level plug and clean any surplus oil away.

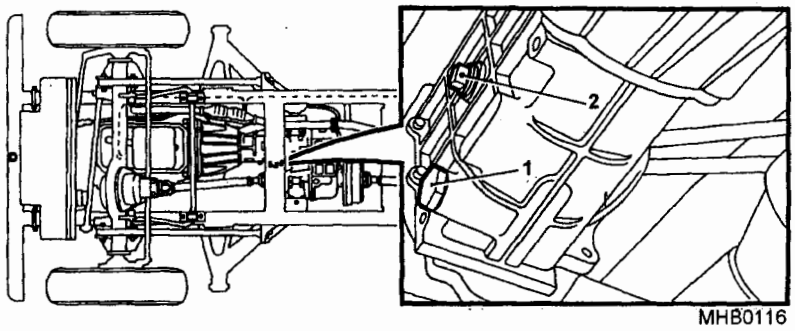

Fig 29 Gearbox drain plug

TRANSFER GEARBOX

34 The transfer gearbox is situated to the rear of the main gearbox.

34.1 To check/top up the transfer gearbox. Locate the filler/level plug (Fig 30 (1)) at the back of the transfer gearbox and undo.

34.2 Top up with the specified oil until the oil begins to run out of the filler/level hole.

34.3 Fit and tighten the transfer gearbox filler/level plug and clean any surplus away.

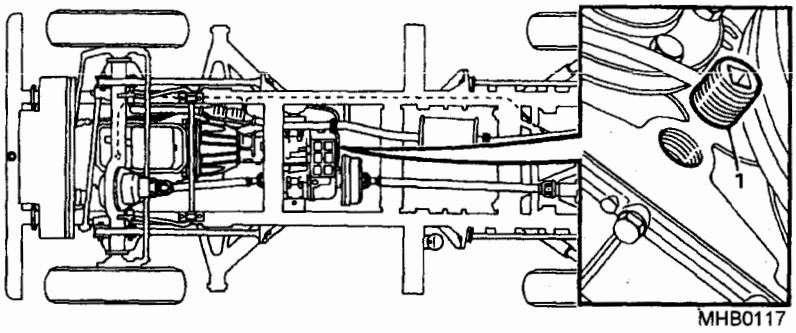

Fig 30 Transfer gearbox filler plug

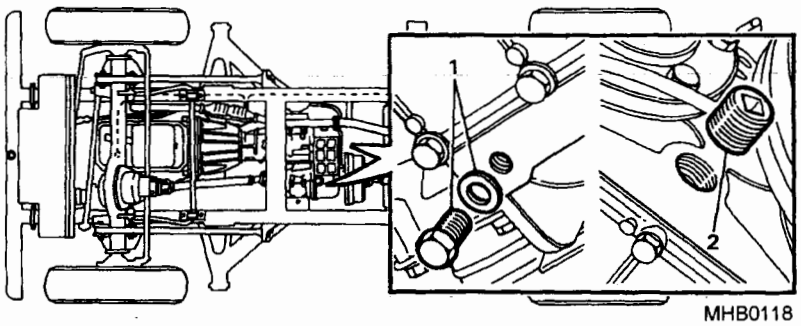

Fig 31 Transfer gearbox filler/drain plug

34.4 To change the transfer gearbox oil. Place a suitable container under the transfer gearbox drain plug.

34.5 Remove the drain plug and washer (Early models). (Fig 31 (1)) or drain plug only (Later models) and allow the oil to drain completely.

34.6 Fit the drain plug (1) and washer (Early models) tighten.

34.7 Remove the filler/level plug (2) and fill the transfer gearbox with the specified oil until it begins to run out of the filler/ level hole.

34.8 Fit and tighten the transfer gearbox filler/level plug and clean any surplus away.

FRONT AND REAR DIFFERENTIAL AXLES

35 TUL vehicles are equipped at the front and rear with "Rover" type differential axles. TUM vehicles are equipped with the same front axles and "Rover" heavy duty rear axles.

35.1 To check/top up the differential axle oil. Locate and undo the filler/level plug (Fig 32 (2)) on the differential axle.

35.2 Top up with the specified oil until it begins to run out of the hole.

35.3 Fit and tighten the differential axle filler/level plug and clean any surplus oil away.

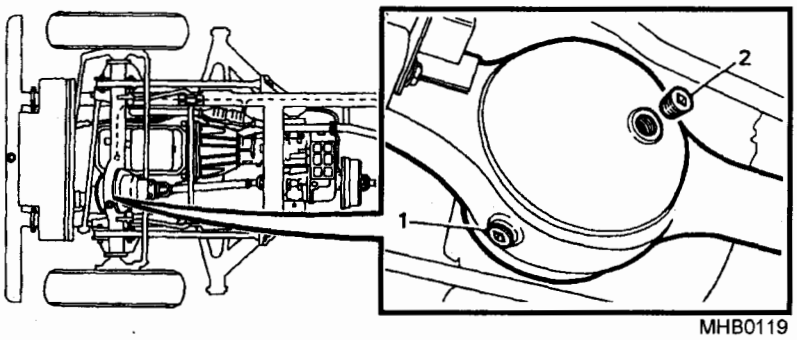

Fig 32 Rover differential axle filler/drain plug (TUL/TUM)

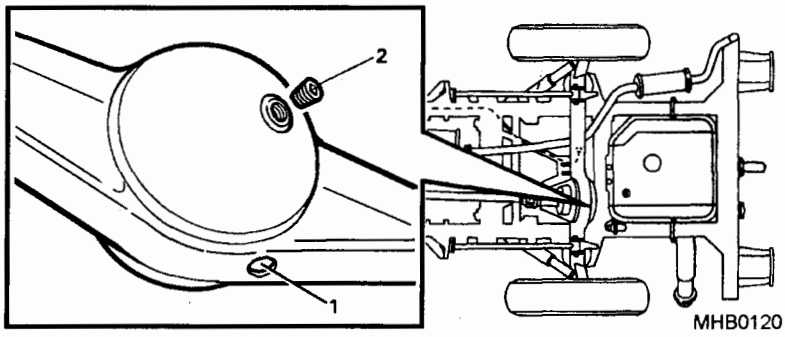

Fig 33 Rover heavy duty differential axle filler/drain plug (TUM)

35.4 To change the differential axle oil. Immediately after a run, when the oil is warm drain the differential axle by removing the drain plug (Fig 32 and 33 (1)) located at the bottom of the axle casing.

35.5 Fit the drain plug and tighten.

35.6 Remove the filler/level plug (2) and fill the differential axle with the specified oil until it begins to run out of the filler/level hole.

35.7 Fit and tighten the differential axle filler/level plug and clean any surplus oil away.

SWIVEL PIN HOUSING

36 The swivel pin housings are located at the end of the front axle and the grease lubricates the constant velocity joints, swivel pins and front hubs. They are packed for life and do not require any maintenance.

37 If any damage is found on inspection, report it immediately for further investigation.

38 There is a filler plug (Fig 34 (1)), this is for maintenance only.

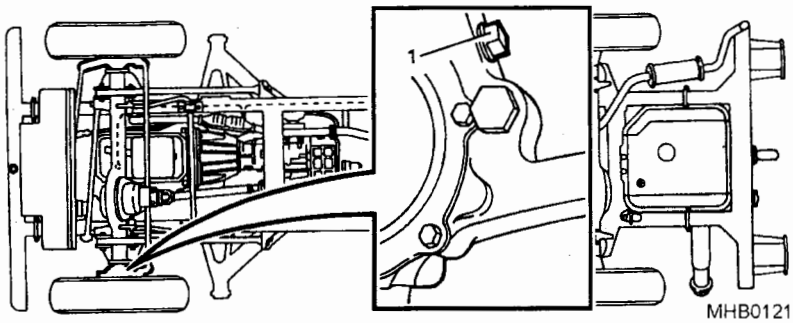

Fig 34 Swivel pin housing filler plug

BATTERIES

39 The batteries are located underneath the left hand seat.

39.1 Checking the batteries. Lift off the left hand seat cushion (Fig 35 (3)).

39.2 Undo the overcentre catch (1) and slide the cover (2) from the seat base.

39.3 Disconnect the negative earth lead from the batteries.

39.4 Gently screw off the vent cover (4) and inspect the electrolyte level of the centre cell. If low top up with distilled water to a maximum of 3 mm (0.12 in) above the plates.

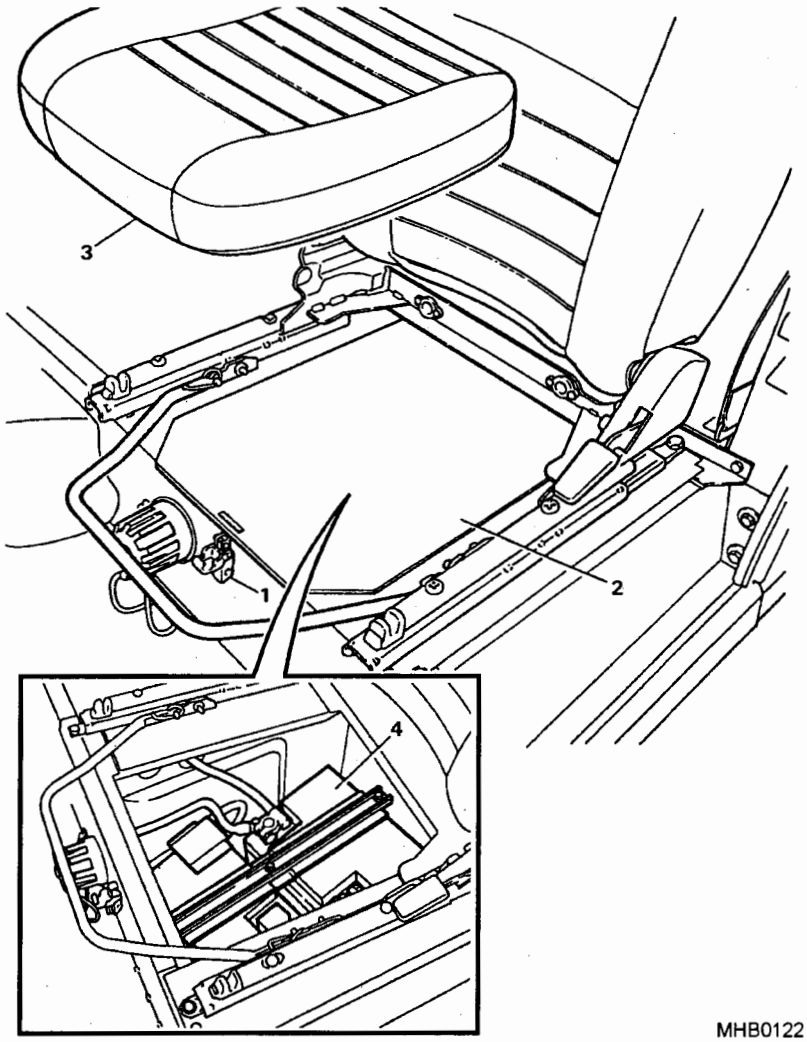

Fig 35 Batteries

39.5 Replace the vent cover, also clean and grease the battery terminals with the specified grease.

39.6 Reconnect the negative earth lead to the batteries.

39.7 Slide the cover back into place and secure using the overcentre catch.

39.8 Replace the seat cushion.

NOTE

If air portable batteries fail to recharge refer to Cat 512 Chapter 13-1 Chart Number 5.

AXLE BREATHING SYSTEM

40 There are two axle breather pipes, (Fig 36), one from each axle tube, which terminate inside the engine compartment.

CAUTION

BREATHER PIPES. Blocked breather pipes may cause damage to the axles, so ensure that regular servicing is carried out. When the vehicle has undergone rugged and difficult conditions more frequent servicing may be required.

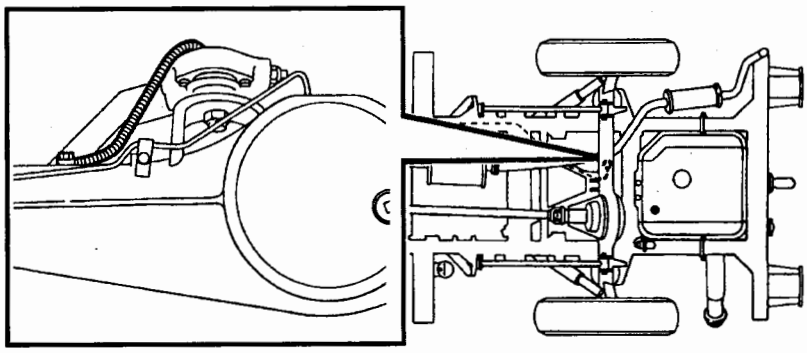

MHB0124

Fig 36 Axle breathing system

40.1 Cleaning the axle breather pipes. Check that both pipes are clear of mud or debris and are not kinked, split or damaged.

40.2 If a pipe is blocked, undo the nut and release the banjo on the appropriate axle tube and remove the pipe.

40.3 Carefully clean the pipe until the blockages have been removed.

40.4 Replace the pipe and secure to the axle tube with the banjo bolt.

PROPELLER SHAFTS

41 The propeller shafts are located underneath the vehicle and connect the transfer box to the front and rear differential axles.

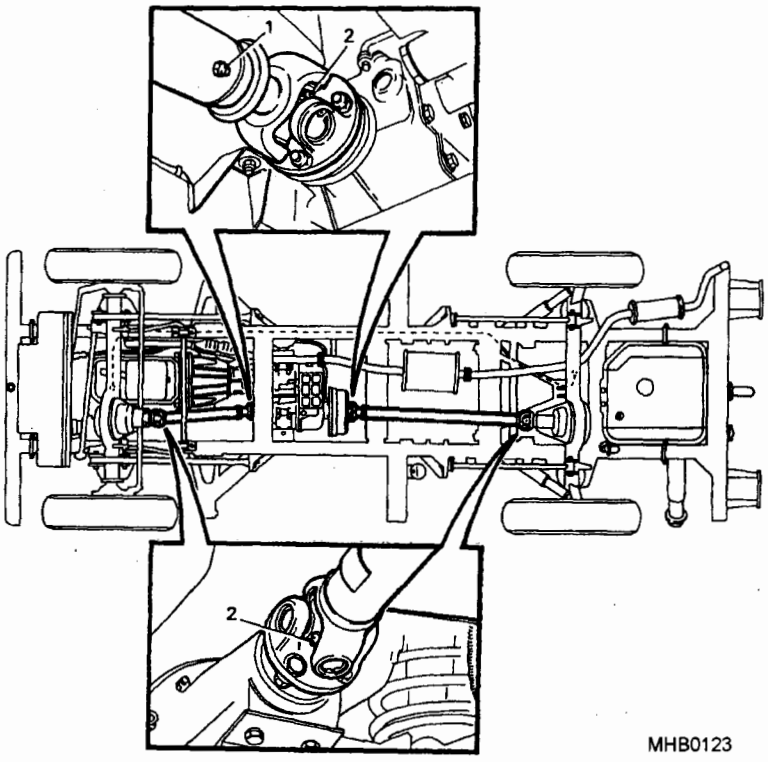

Fig 37 Propeller shafts

NOTE

Due to the type of sliding joint used on these shafts, only light greasing is required.

41.1 Lubricating the propeller shafts. Apply the recommended grease to the grease nipples (Fig 37 (1)) at the sliding ends of each shaft, also to the grease nipples (2) inside each of the universal joints.

WINDSCREEN WIPER BLADES

42 Check the windscreen wiper blades and if necessary, renew using the following procedure:

42.1 Lift the wiper arm away from the windscreen.

42.2 Squeeze the spring clip (Fig 38 (2)) and push the blade towards the windscreen.

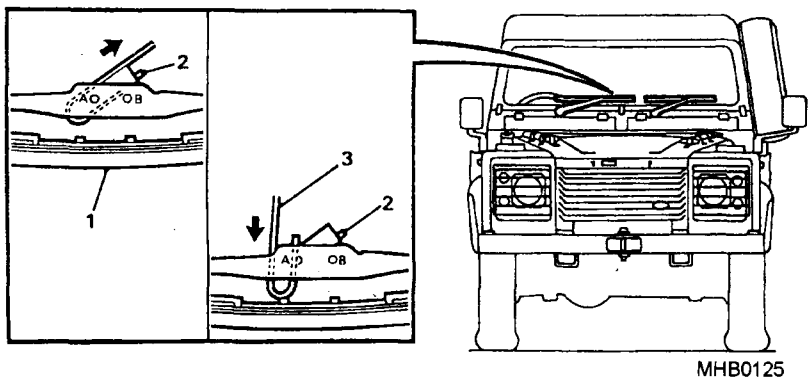

Fig 38 Windscreen wiper blade

42.3 To free the blade (1), unhook from the wiper arm (3).

42.4 To fit, push the new blade over the wiper arm.

42.5 Hook the arm into the swivel bracket on the blade ensuring that the remaining clip is engaged.

JACKING THE VEHICLE

43 To operate the jack proceed as follows:

WARNINGS

(1) PROCEDURE. IT IS IMPORTANT THAT THE JACKING PROCEDURE DESCRIBED IN THIS HANDBOOK IS FOLLOWED. WHEELS SHOULD BE CHOCKED UNDER ALL CIRCUMSTANCES.

(2) CHOCKING. THE HANDBRAKE ACTS ON THE TRANSMISSION, NOT THE REAR WHEELS AND MAY NOT HOLD THE VEHICLE WHEN JACKING UNLESS THE FOLLOWING PROCEDURE IS USED. IF ONE FRONT WHEEL AND ONE REAR WHEEL ARE RAISED NO VEHICLE HOLDING OR BRAKING EFFECT IS POSSIBLE. WHEELS SHOULD BE CHOCKED UNDER ALL CIRCUMSTANCES.

(3) STABILITY. IT IS UNSAFE TO WORK UNDER THE VEHICLE WITH ONLY THE JACK TO SUPPORT IT. ALWAYS USE STANDS OR OTHER SUITABLE SUPPORTS TO PROVIDE ADEQUATE SAFETY.

(4) SAFETY. WHEN JACKING THE VEHICLE ENSURE THE JACK IS USED ON LEVEL AND FIRM GROUND ONLY.

(5) PROCEDURE. TO ENSURE SAFETY WHEN USING THE JACK THE FOLLOWING PROCEDURE SHOULD BE FOLLOWED:

(6) DIFF LOCK. ALWAYS ENGAGE DIFFERENTIAL LOCK BEFORE JACKING.

(7) SAFETY. NO PERSON SHOULD REMAIN IN A VEHICLE BEING JACKED.

(8) BRAKING. APPLY THE HANDBRAKE AND ENGAGE FIRST GEAR IN THE MAIN GEARBOX.

(9) GEARS. ENGAGE LOW GEAR IN THE TRANSFER BOX.

(10) MAINTENANCE. NEGLECT OF THE JACK MAY LEAD TO DIFFICULTY IN A ROAD SIDE EMERGENCY. EXAMINE THE JACK OCCASIONALLY. CLEAN THE THREAD TO PREVENT THE FORMATION OF RUST.

43.1 Position the jack under the vehicle, as described for front or rear wheels.

43.2 Assemble the two piece operating handle.

43.3 Use the handle to close the valve at the base of the jack by turning it fully clockwise.

43.4 To raise the jack insert the handle into the sleeve on the side of the jack and pump the handle up and down.

43.5 To lower the jack, slowly open the valve by turning the handle anti-clockwise.

43.6 Remove the jack, dismantle the handle and stow in the vehicle.

43.7 To jack up a front wheel. Position the jack so that when raised it will engage with the front axle casing, immediately below the coil spring where it will locate between the flange at the end of the axle casing and the large bracket to which the suspension members are mounted.

43.8 To jack up a rear wheel. Position the jack so that when raised it will engage with the rear axle casing, immediately below the coil spring and as close to the shock absorber mounting bracket.

WHEEL CHANGING

44 When changing any of the wheels on the vehicle use the wheel brace as supplied.

WARNINGS

(1) STABILITY. IT IS UNSAFE TO WORK UNDER THE VEHICLE USING ONLY THE JACK TO SUPPORT IT. ALWAYS USE STANDS OR OTHER SUITABLE SUPPORTS TO PROVIDE ADEQUATE SAFETY.

(2) BRAKING. THE HANDBRAKE ACTS ON THE TRANSMISSION NOT ON THE REAR WHEELS AND MAY NOT HOLD THE VEHICLE WHEN JACKING UNLESS THE FOLLOWING PROCEDURE IS USED. IF ONE FRONT WHEEL AND ONE REAR WHEEL ARE RAISED NO VEHICLE HOLDING OR BRAKING EFFECT IS POSSIBLE. WHEELS SHOULD BE CHOCKED AT ALL TIMES.

(3) TRAILER. IF THE VEHICLE IS COUPLED TO A TRAILER, DISCONNECT THE TRAILER FROM THE VEHICLE BEFORE COMMENCING JACKING. THIS IS TO PREVENT THE TRAILER PULLING THE VEHICLE OFF THE JACK AND CAUSING PERSONAL INJURY.

CAUTIONS

(1) WHEELBRACE. When using the wheel brace from the vehicle tool kit apply hand pressure only. Do not use foot pressure or extension tubes as this could overstress the wheel studs.

(2) WHEELS. When changing the wheels of the vehicle, ensure that all the precautions as previously stated are carried out.

(3) SPARE WHEEL. Ensure the spare wheel is removed from it's stowed position prior to jacking the vehicle.

44.1 To change a road wheel. Using the wheel brace, remove the spare wheel from it's stowed position (refer to para 46) and slacken the nuts on the wheel to be removed before jacking the vehicle.

44.2 Jack up the relevant corner of the vehicle sufficiently to allow a wheel, with a fully inflated tyre, to be fitted.

44.3 When the wheel is clear of the ground, remove the wheel nuts and lift off the wheel.

44.4 Place a drop of oil or grease on the wheel studs to assist in the replacement, if available.

44.5 Fit spare wheel.

44.6 Fit the nuts and tighten until the wheel is secure, without over-tightening the nuts.

44.7 Lower the vehicle to the ground and finally tighten the road wheel nuts in the correct sequence to the specified torque (refer to Fig 39).

44.8 Re-torque the wheel nuts after 100km or 30 minutes.

NOTES

(1) Where possible a torque spanner should be used to ensure that the correct figures are reached.

(2) When a torque spanner cannot be used, tighten as far as possible and report the wheel change immediately.

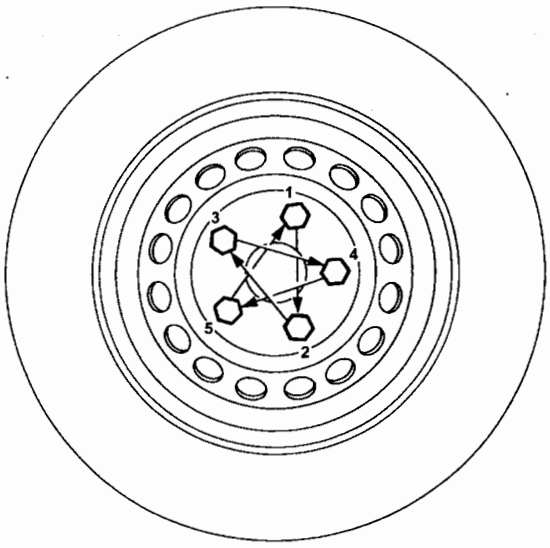

Fig 39 Tightening sequence for wheel nuts

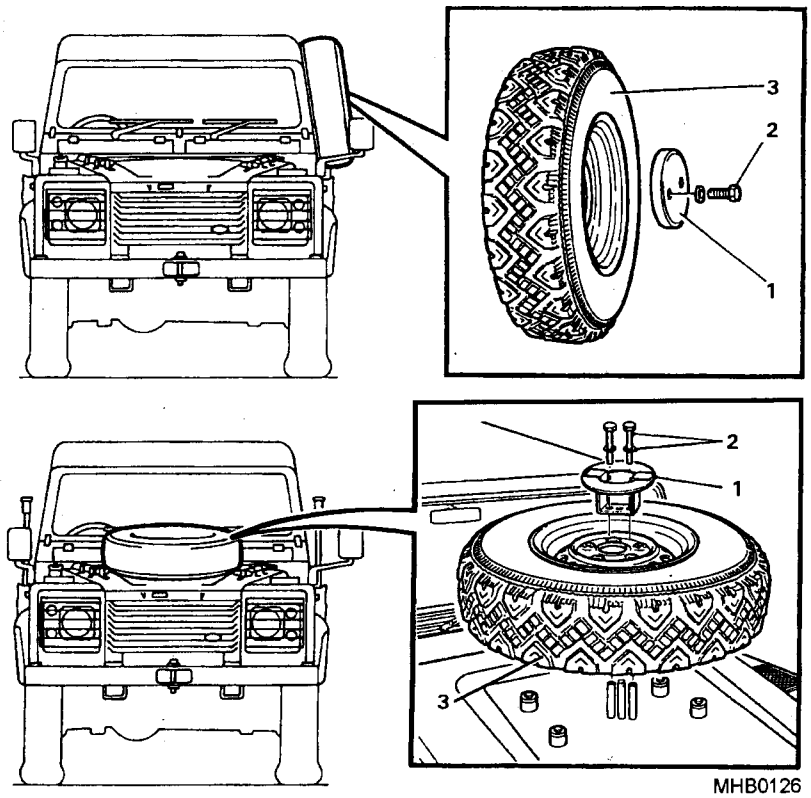

Fig 40 Removing the spare wheel

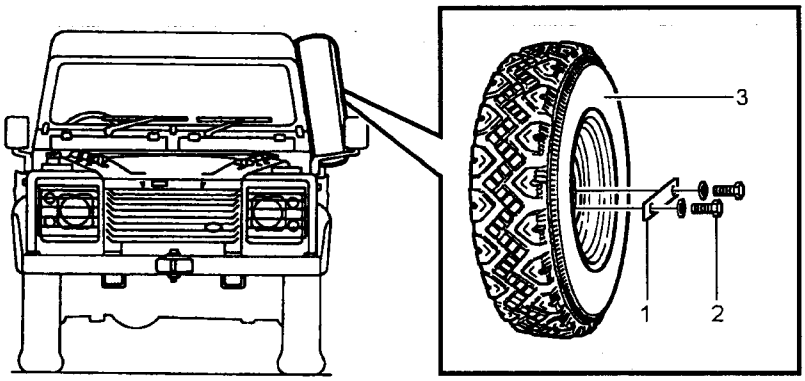

MHB1087

Fig 41 Removing the spare wheel (Bowman mount)

SPARE WHEEL

WARNING

LIFTING. THE SPARE WHEEL IS HEAVY TO LIFT, TAKE CARE WHEN LIFTING IT ON AND OFF. THIS WILL REQUIRE TWO MEN UNLESS THE SPARE WHEEL LIFTING HARNESS IS USED.

45 Mounting the spare wheel on the bonnet is only approved when the vehicle is being transported by rail, ship or air. At all other times the spare wheel must be mounted on the side of the vehicle.

46 In normal use the spare wheel should be mounted on the side of the vehicle.

CAUTIONS

(1) The Spare wheel should always be mounted on the side of the vehicle nearest the roadside kerb.

(2) The mirrors should also be changed around if necessary. The long arm mirror assembly should always be fitted to the side of the vehicle that has the spare wheel mounted.

46.1 To remove the spare wheel. Undo and remove the two retaining bolts (Fig 40,41 (2)) and clamp plate (1).

46.2 Remove the spare wheel (3) from its location.

46.3 To replace the spare wheel. Place the spare wheel on to its location.

46.4 Fit the clamp plate and secure with the two bolts.

Spare wheel lifting harness

Spare wheel lifting harness - Side mounted spare wheel

47 A spare wheel lifting harness can be fitted to the position on the side of the vehicle to enable the driver to remove and re-stow the spare wheel unassisted.

47.1 To remove the spare wheel. Undo and remove the two retaining bolts (Fig 40,41 (2)) and clamp plate (1).

47.2 Pull the top of the wheel away from the vehicle and off the spare wheel carrier (Fig 42 (1)). Let the harness take the weight of the wheel and gently rotate the wheel downwards against the side of the vehicle (2) until the harness is fully extended (3).

47.3 Release the adjustment cleats and lower the wheel to the ground (Fig 43 (1)).

47.4 Remove the plastic stops (2) from the wheel stud holes and the valve extension tube from the air valve. The spare wheel is now ready for use.

47.5 To replace the spare wheel. Position the spare wheel under the harness with the front face of the wheel facing outwards and refit the valve extension tube to the air valve.

47.6 Push the plastic stops through the wheel stud holes from the back of the wheel ensuring that they are one wheel stud hole apart.

47.7 Lift the wheel off the ground by pulling the harness adjusting straps through the cleats until they meet the metal buckles.

47.8 Stow the excess straps in the bag in the centre of the harness assembly.

47.9 Using both hands, lift the lower edge of the wheel and turn it through 180 degrees against the side of the vehicle, so that the centre of the inverted wheel locates up against the wheel carrier.

47.10 Push the wheel upwards to locate it on the spare wheel carrier.

WARNING

FALLING OBJECTS. THE SPARE WHEEL MUST ALWAYS BE SUPPORTED IN POSITION ON THE WHEEL CARRIER UNTIL THE CLAMP AND BOLTS ARE FITTED.

47.11 Fit the clamp plate and secure with the two bolts.

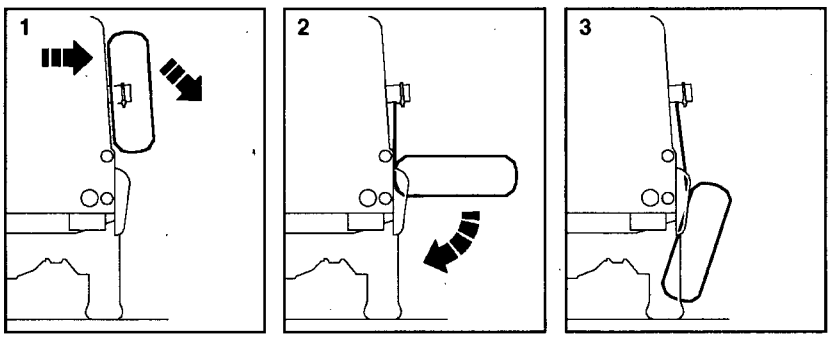

MHB1072

Fig 42 Removing the side mounted spare wheel using the lifting harness

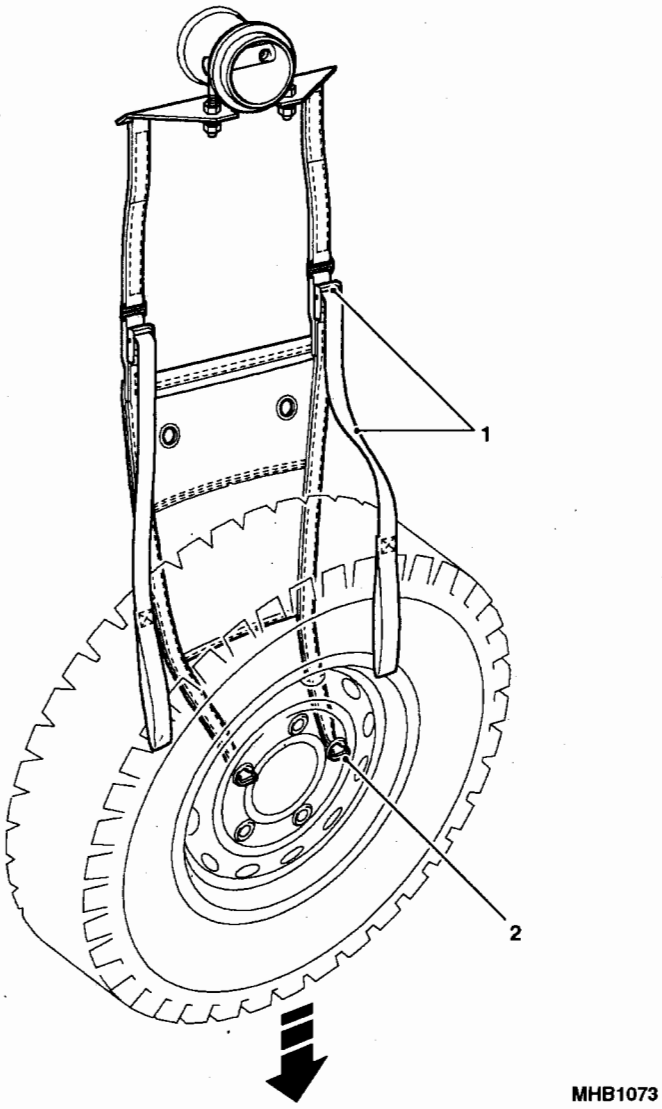

Fig 43 Lowering the side mounted spare wheel using the lifting harness

Spare wheel lifting harness - Rear mounted spare wheel

48 A spare wheel lifting harness can be fitted to the spare wheel carrier on the rear of the vehicle to enable the driver to remove and re-stow the spare wheel unassisted.

48.1 To remove the spare wheel. Remove the three wheel nuts securing the spare wheel.

48.2 Pull the top of the wheel away from the vehicle and off the spare wheel carrier (Fig 44 (1)). Let the harness take the weight of the wheel and gently rotate the wheel downwards (2) onto the ground (3).

48.3 Remove the plastic stops (Fig 45 (1)) from the wheel stud holes. The spare wheel is now ready for use.

48.4 To replace the spare wheel. Position the spare wheel under the harness with the front face of the wheel facing inwards.

48.5 Push the plastic stops through the wheel stud holes from the front of the wheel ensuring that they are one wheel stud hole apart.

NOTE

The harness adjusting straps (2) do not require adjustment.

48.6 Using both hands, lift the spare wheel with both hands and lift the lower edge of the spare wheel and rotate wheel so that the centre of the wheel locates up against the wheel carrier on the side of the vehicle.

48.7 Push the wheel upwards to locate it on the spare wheel carrier.

WARNING

FALLING OBJECTS. THE SPARE WHEEL MUST ALWAYS BE SUPPORTED IN POSITION ON THE WHEEL CARRIER UNTIL THE WHEEL NUTS ARE FITTED.

48.8 Support the spare wheel in the stowed position while securing the wheel with wheel nuts.

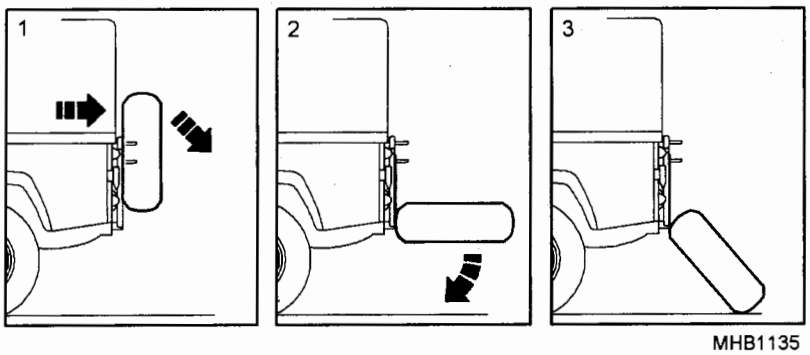

Fig 44 Removing the rear mounted spare wheel using the lifting harness

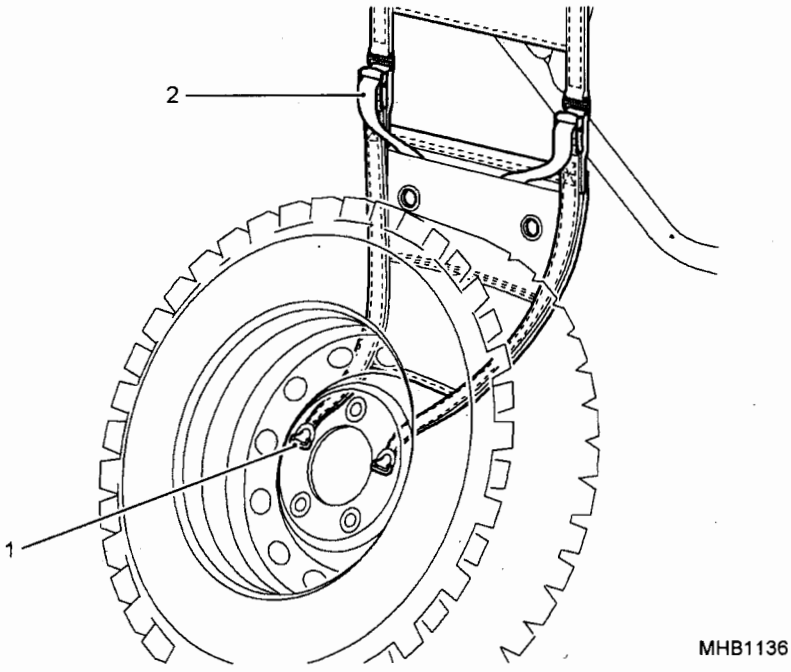

Fig 45 Rear mounted lifting harness

ENGINE COOLING SYSTEM

WARNING

EXPANSION CAP. DO NOT REMOVE THE EXPANSION CAP WHEN THE ENGINE IS HOT BECAUSE THE COOLING SYSTEM IS PRESSURISED AND PERSONAL SCALDING COULD RESULT.

CAUTIONS

(1) EXPANSION CAP. Failure to tighten the expansion cap may result in coolant loss with possible damage to the engine through overheating.

(2) COOLANT. Never run the engine without coolant, not even for a very brief period, otherwise the injectors may be seriously damaged. This is due to the very high rate of heat transfer in the region of the injector nozzles.

(3) CORROSION. As a precaution against corrosion, the cooling system should be drained and flushed out as specified.

49 The cooling system is located inside the engine compartment and comprises of the expansion tank connected to the radiator by way of the engine. The engine coolant is a mixture of two fluids and is an aid to protecting the engine from overheating.

Expansion tank

50 The expansion tank is located on the right hand wing valance.

50.1 When removing the filler cap (Fig 46 (1)) proceed as follows:

50.2 Turn the cap anti-clockwise a quarter of a turn and allow the pressure to escape, before turning further in the same direction to lift it off.

50.3 When replacing the expansion tank cap, it is important that it is tightened down fully.

Cooling system protection

51 The cooling system should be protected as follows:

51.1 In cold climates against frost and corrosion by using the anti-freeze as specified.

51.2 It is essential therefore if the cooling system is drained or topped-up at any time either in winter or summer, to refill with a solution of water and the correct type of anti-freeze, otherwise damage to the engine will result.

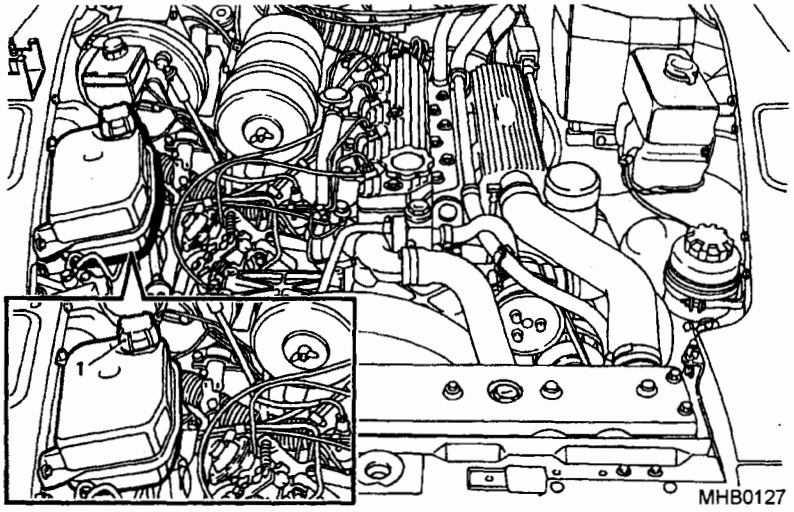

Fig 46 Expansion tank

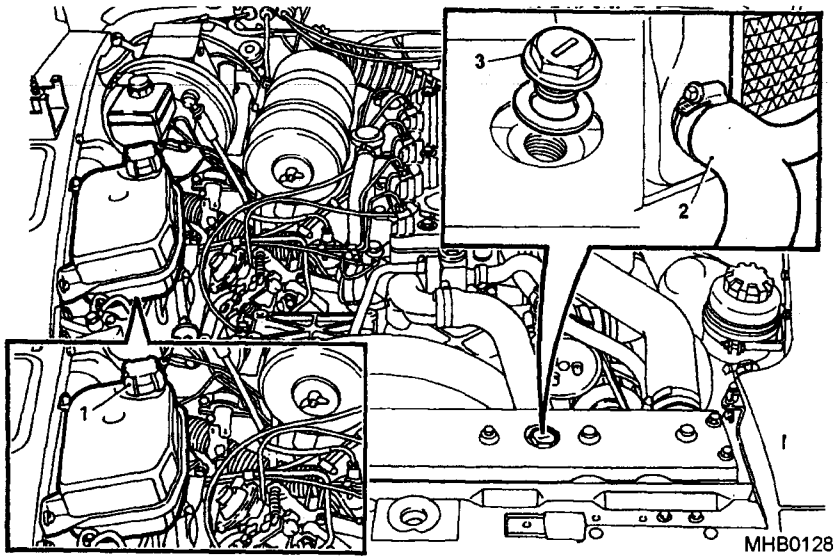

Fig 47 Radiator and expansion tank

Flushing the engine cooling system

52 To flush the system

52.1 Remove the expansion tank (Fig 47 (1)) and radiator filler caps (3).

52.2 Remove radiator bottom hose (2).

52.3 Remove the cylinder block drain plug (Fig 48 (1)) which is on the left hand side of the engine.

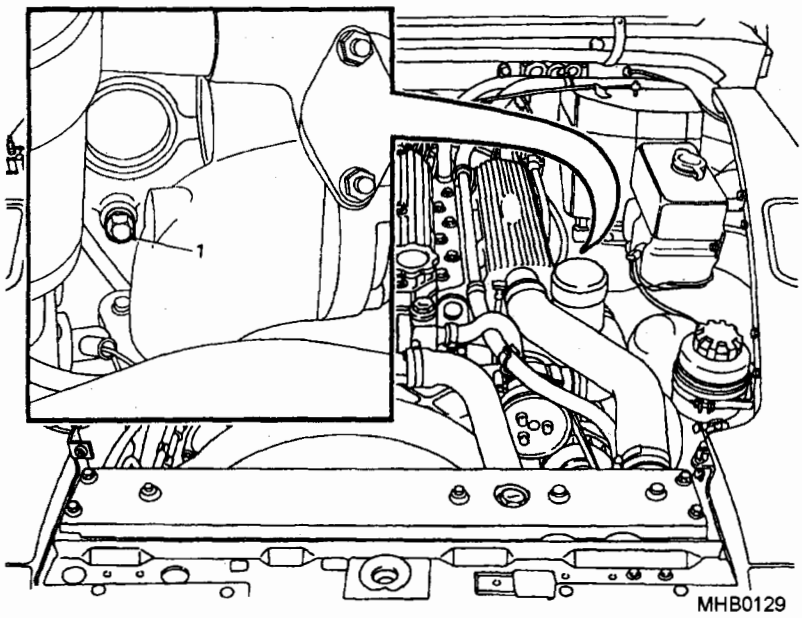

Fig 48 Cylinder block drain plug

52.4 To drain the expansion tank, disconnect the hose from the tank.

52.5 Flush the system thoroughly.

52.6 Fit the pipe, engine drain plug and radiator drain plug/bottom hose.

52.7 Fill the system with the correct solution of water and anti-freeze through the expansion tank until half full.

52.8 Fit the expansion tank cap and radiator filler plug, run the engine until the operating temperature has been achieved, allow to cool and check level, top up if necessary.

NOTES

(1) Never use salt water with anti-freeze or an inhibitor, otherwise corrosion will occur.

(2) In certain territories where the only available water supply may have some salt content, use only clean rainwater or distilled water.

(3) (After draining, flushing and refilling the system, the engine must be run for 5 minutes to ensure elimination of any air locks from within the cooling system.

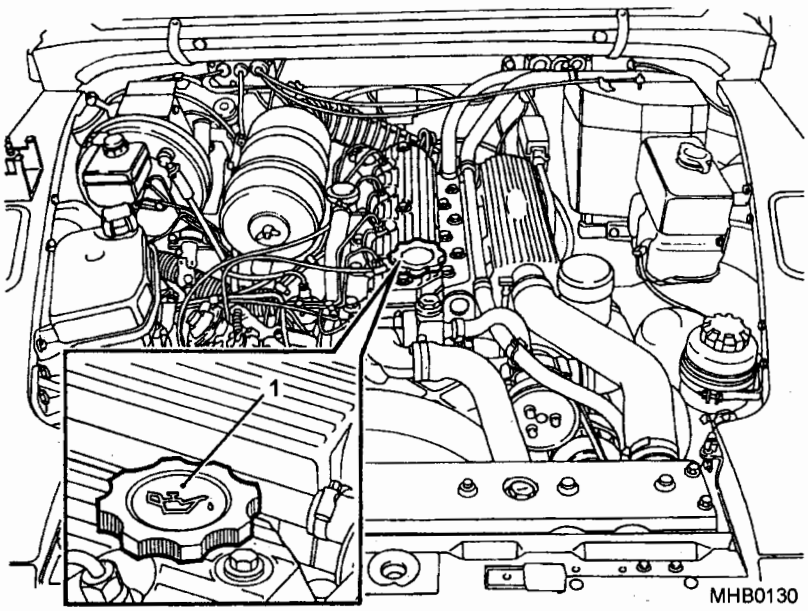

Fig 49 Engine oil filler cap

ENGINE OIL FILLER CAP

53 The engine oil filler cap (Fig 49 (1)) is situated on top of the rocker box cover towards the forward end of the engine. If the engine oil level is low it can be topped up through the filler cap.

WINDSCREEN WASHER RESERVOIR

54 The reservoir (Fig 50 (2)) is located on the wing valance and has provision for two pumps to feed the front and rear (where fitted) wash/wipe system.

54.1 To top up the reservoir. Remove reservoir cap (1).

54.2 Top-up to within approximately 25 mm (1.0 in) below the bottom of the filler neck.

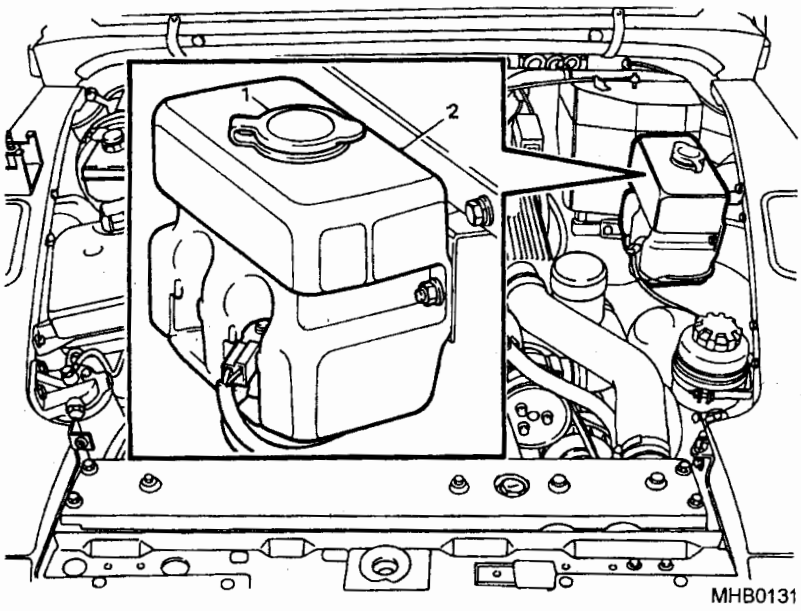

Fig 50 Windscreen washer reservoir

54.3 Use a screen washer solvent in the container, it will assist in removing mud, flies and road film from the windscreen.

54.4 Keep the washer bottle filled with clean water and solvent.

DRIVE BELT

55 Examine the pulley for damage and check that there are no pebbles or grit trapped in the grooves that could damage or reduce the life of the drive belt.

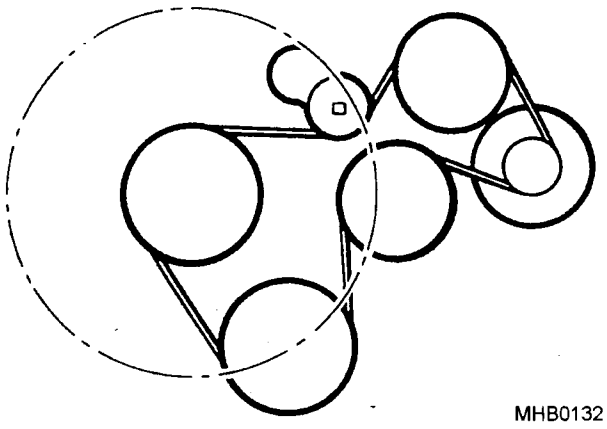

Fig 51 Serpentine drive belt

56 The vehicle operates on a normal 24V electrical system. The ancillaries are driven from a single serpentine belt. The belt has an automatic adjustment system therefore does not require adjusting.

56.1 To remove the serpentine belt. Using a 15 mm ring spanner, move the auto tensioner so that the belt is free.

56.2 Whilst releasing the tension, remove the belt from the pulleys.

56.3 To fit the serpentine belt. Loop the belt over the cooling fan

56.4 Loop the belt around the pulleys leaving the top one till last.

56.5 Tension the auto tensioner and loop the belt over the last two pulleys.

56.6 Release the tensioner slowly so there is no sudden pressure put on to the drive belt.

DAILY AND WEEKLY CHECKS

57 The following are the daily and weekly checks that are required for the correct operation of the vehicle.

Daily checks

57.1 Examine the vehicle for obvious signs of damage.

57.2 Ensure that the vehicle has sufficient fuel, oil and coolant for the journey.

57.3 Examine and operate the doors, locks, safety catches and bonnet catches.

57.4 Examine for clarity and damage the windscreen and windows.

57.5 Examine for cracks and deterioration of reflective surfaces of the rear view mirrors.

57.6 Examine and operate the seat belts and attachments.

57.7 Ensure the vehicle is fitted with serviceable fire extinguisher(s).

57.8 Ensure correct operation of the lamps, horn, windscreen wipers and washers, direction indicators, hazard warning lights, heaters and demisters, instruments and gauges.

57.9 Examine for damage and operate the obligatory front and rear lights and headlights.

57.10 Check level and replenish as necessary the windscreen washer reservoir.

57.11 Examine for security of attachment and damage of the windscreen washer reservoir.

57.12 Examine for cuts and other damage, check tread depth and pressures of the tyres (including spare wheel).

57.13 Visually examine wheels for security.

57.14 Examine registration, marker and legal plates.

57.15 Examine for damage and security of attachment of the reflectors.

57.16 Examine the towing pintle ensuring that the locking latch is free and locking pins are in place and attached by securing chains.

57.17 Ensure correct operation of the brakes and steering.

Weekly checks

57.18 Examine the alternator (FFR only) and serpentine belts for fraying and correct tension.

57.19 Check level and replenish as necessary the power steering reservoir.

57.20 Check level and replenish as necessary the brake and clutch reservoirs.

CHAPTER 4-2

FITTED FOR RADIO (FFR)

CONTENTS

Para

1 Introduction
2 Bulbs
3 Ammeter
4 Fast fuse
To replace the fuse
5 Alternator drive belt
Degree of belt damage
8 Tensioning the belt
To adjust the belt tension
9 Fitting a new belt
To remove the belt
To refit the belt
10 Radio batteries (WARNING)
11 Battery Configuration
12 Battery isolation switch and import/export system
Relay box - 3 amp fuse renewal
13 Power import/export socket - 3 amp fuse renewal
14 Warning buzzer and test button (WARNING)

Fig		Page
1	Ammeter	2
2	Fast fuse	3
3	Belt damage	4
4	Alternator serpentine belt	5
5	Radio batteries	8
6	Battery configuration	9
7	Relay box fuse renewal	10
8	Import/export socket fuse renewal	11
9	Warning buzzer and test button	13/14

INTRODUCTION

1 This sub-chapter describes the User Maintenance applicable to the Fitted For Radio (FFR) TUL and TUM vehicles, which have not been covered by Sub-Chapter 4-1.

BULBS

2 The bulb replacement for the basic vehicles are covered in Sub-Chapter 4-1 except for the following items:

AMMETER

3 The ammeter is situated in the centre of the auxiliary panel, below the main lighting panel.

3.1 Disconnect the negative earth lead from the battery.

3.2 Undo the four screws (Fig 1 (1)) retaining the main lighting switch panel (2).

3.3 Ease the panel forward as far as possible to gain access to the bulb holder (3).

3.4 Remove the defective bulb (4) and discard.

3.5 Fit a new bulb and refit the main lighting switch panel securing it with the four screws.

3.6 Reconnect the negative earth lead from to the battery.

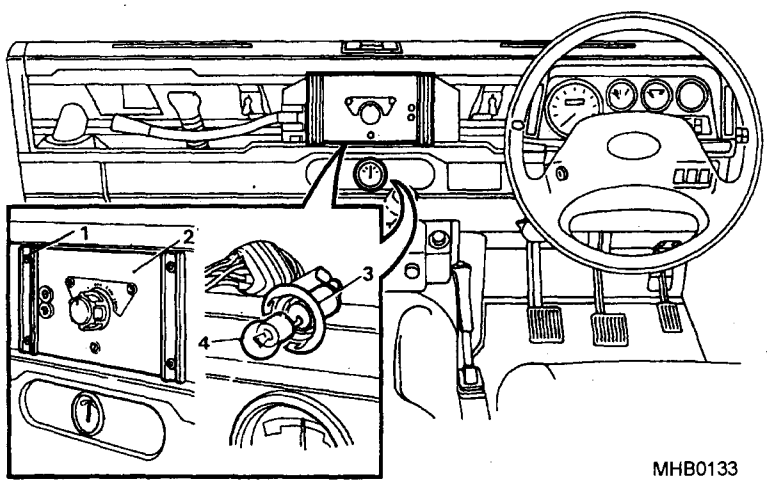

Fig 1 Ammeter

FAST FUSE

4 The fast fuse is located behind the front seats attached to the bulkhead. To replace the fuse proceed as follows:

4.1 Disconnect the negative earth lead from the battery.

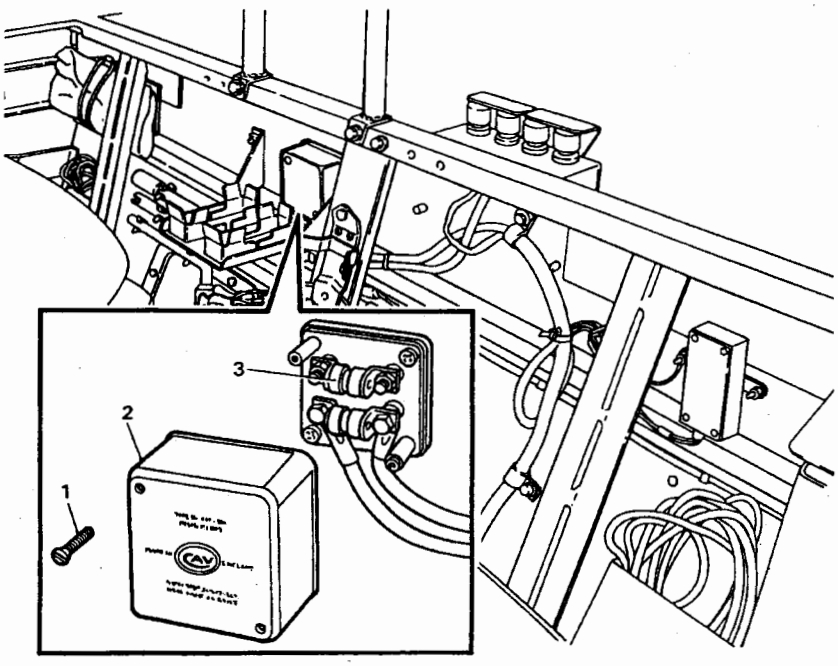

MHB0134

Fig 2 Fast fuse

4.2 Undo the two screws (Fig 2 (1)) and remove the cover (2).

4.3 Renew the defective fuse with the spare (3), located in the box.

NOTE

If the spare is used report it as soon as possible so that another replacement fuse may be fitted.

4.4 Fit the cover and secure with the two screws.

4.5 Reconnect the negative earth lead to the battery.

ALTERNATOR DRIVE BELT

5 Examine all pulleys for damage and check that there are no pebbles or grit trapped in the grooves that could damage or reduce the life of the drive belt. The radio batteries operate off a 24V supply.

6 The construction of the belt allows for a degree of visible damage (Fig 3) within its service life as follows.

6.1 That multiple holes, splits or punctures within the body of the belt exceed two adjacent ribs.

6.2 That no splits/tears or holes exist in either edge of the belt exceed one rib width.

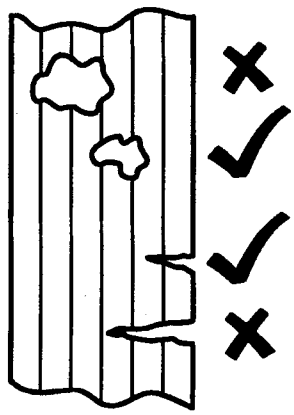

MHB0172

Fig 3 Belt damage

7 A separate belt drives the alternator from the engine crankshaft pulley and the drive is permanent whilst the engine is operating. The 24V alternator charges the radio batteries located in the rear of the vehicle.

Tensioning the belt

8 To check the auxiliary drive belt apply finger pressure between the alternator pulley (Fig 4 (1)) and the crankshaft pulley (2). Adjust the belt tension as follows.

8.1 Slacken the tensioner pulley bolts (3).

8.2 Adjust the belt (4) to the correct tension by moving the tensioner in or out as required (refer to Cat 601 table 3 serial 2).

8.3 Tighten the tensioner securing bolts.

NOTE

Check that the belt tension has been maintained during the tightening sequence.

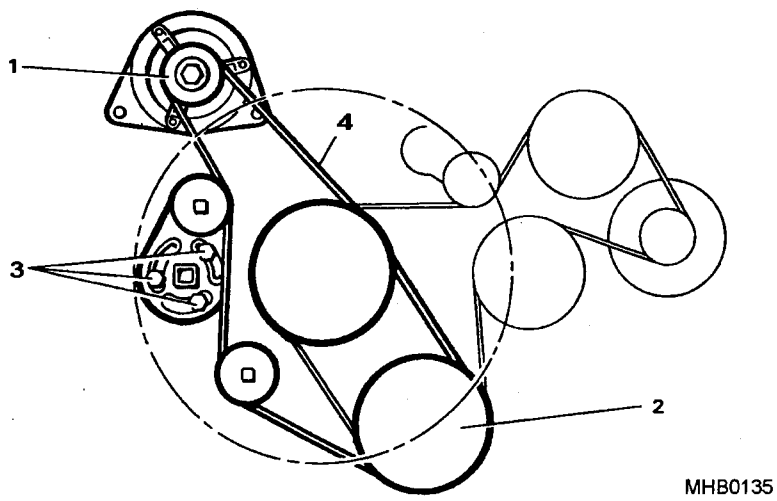

Fig 4 Alternator serpentine belt

Fitting a new belt

9 After establishing that the belt is no longer serviceable, (refer to Paragraph 6) renew the belt immediately.

9.1 Removing the belt. Remove the engine serpentine belt (Chapter 4-1 Paragraph 50.1)

9.2 Slacken the tensioner pulley bolts (3).

9.3 Remove the belt (4).

9.4 Fitting the belt. Loop the belt around the pulleys.

9.5 Tension the belt (refer to paragraph 8.3).

9.6 Tighten the tensioner securing bolts.

NOTE

Check that the belt tension has been maintained during the tightening sequence.

9.7 Refit the engine drive belt (Chapter 4-1 paragraph 50.3)

RADIO BATTERIES

10 The radio batteries are stowed inside the battery stowage box directly under the radio table in the rear of the vehicle. To change the batteries:

10.1 Isolate both vehicle batteries by removing the vehicle battery negative lead. Isolate the radio batteries by removing the battery lead plug from the auxiliary terminal box. Press the battery isolation switch to isolate the Comm's system.

10.2 Undo the two retaining screws (Fig 5 (8)) located on top of the box.

10.3 Ease the front cover forward then lift out.

10.4 Using the handles slide the radio battery trays far enough out of the battery box to access the negative battery leads.

NOTE

Avoid snagging the battery breather tubes and the warning buzzer wiring when removing the battery tray from the radio table.

10.5 Disconnect the vehicle Radio battery negative leads from both banks of batteries by loosening the wing nut (1) and unhooking the leads from the battery terminals. The battery clamps should be transferred to new batteries as necessary. Make sure the negative leads are stowed correctly in the clips provided as shown on the negative battery stowage label (7).

10.6 Fully slide the battery trays out of the battery box to access the radio battery positive leads. Loosen the wing nuts and unhook the positive leads from the battery clamps. Stow the positive battery leads on the positive lead isolation post (3) provided.

10.7 Disconnect the connecting lead from between the two radio batteries and place safely to one side ready for refitting.

10.8 Undo the two wing nuts (4) and release the battery, clamp plate (6).

10.9 Move the "j" bolts (5) away and remove the clamp plate (6). The batteries can now be removed from the stowage trays (2).

10.10 With the battery box empty check all cables for signs of damage, wear or chaffing. Examine the negative battery retention clips for signs of damage. Check the positive isolation posts and other fixings for looseness or damage. Any problems should be rectified as necessary before proceeding.

10.11 Transfer the battery lugs to the replacement batteries and place in the stowage trays (2). Confirm that the batteries are correctly installed as shown on the battery configuration label on the inner face of the battery box door (Fig 6). Using the Clamp Plate, "J" bolts and wing nuts secure the batteries to the battery trays, ensuring the clamp plates are clear of all battery lugs and battery clamps.

NOTE

When only 2 radio batteries are installed the positive lead not in use should be connected to the isolation post. The negative lead not in use is stowed as indicated on the negative battery stowage label.

10.12 Reconnect the positive leads to the radio batteries. Refit the interconnecting leads and then slide the battery trays into the battery box.

10.13 Reconnect the negative leads to the radio batteries.

WARNING

IF THE WARNING BUZZER SOUNDS AT THIS STAGE THE BATTERIES HAVE BEEN CONNECTED INCORRECTLY. CHECK BATTERY CONFIGURATION (PARA 11) AND RECTIFY.

10.14 If the warning buzzer has not sounded, push the test button, which will result in the warning buzzer sounding to confirm the system is fully operational.

10.15 Reconnect the batteries to the alternator by connecting the battery lead plug to the auxiliary terminal box.

10.16 Replace the front cover and secure with the two retaining screws.

10.17 Reconnect the vehicle battery negative lead.

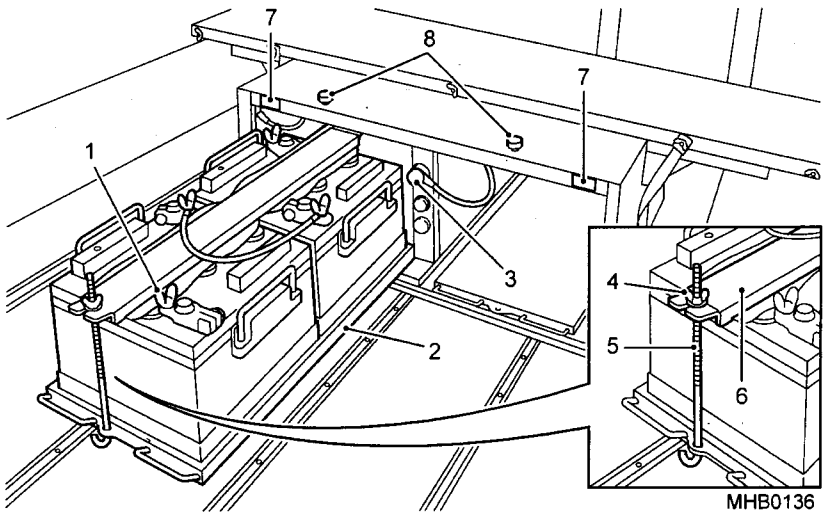

Fig 5 Radio batteries

BATTERY CONFIGURATION

11 Ensure that when replacing radio batteries that they are in their correct sequence with negative pole first (refer to Fig 6).

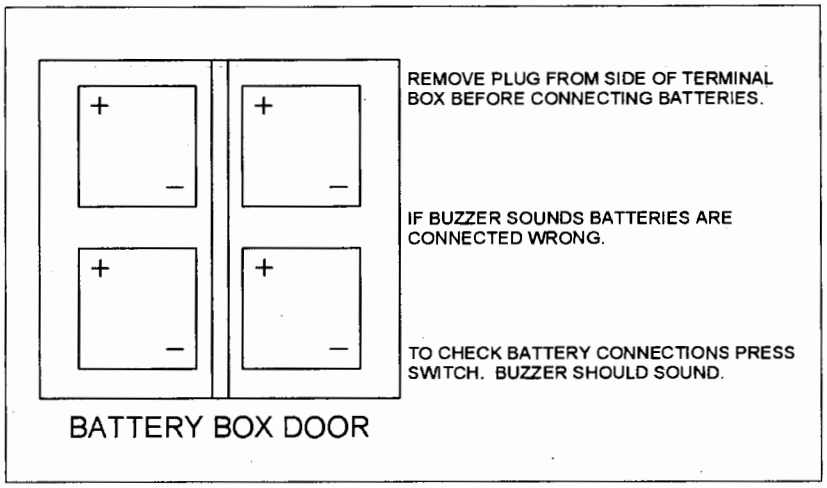

MHB1134

Fig 6 Battery configuration label

BATTERY ISOLATION SWITCH AND IMPORT/EXPORT SYSTEM

Relay box - 3 Amp Fuse renewal

12 A 3 amp fuse is provided to protect the power export relay. To renew the fuse carry out the following:

12.1 Disconnect any external power cables from the import/export socket.

12.2 Press the battery isolation switch to isolate the system (refer to Chap 3-2).

12.3 Disconnect the battery box power lead plug from the auxiliary terminal box.

12.4 Remove the four screws securing the relay box cover and remove the cover (1).

12.5 Renew the fuse (2) with the spare supplied.

12.6 Refit the cover.

12.7 Connect the battery box power lead plug to the auxiliary terminal box.

12.8 Reset the isolation switch (refer to Chap 3-2).

12.9 Reset the circuit breakers on the relay box to restore power to the system (refer to Chap 3-2).

12.10 Replace the spare fuse as soon as possible.

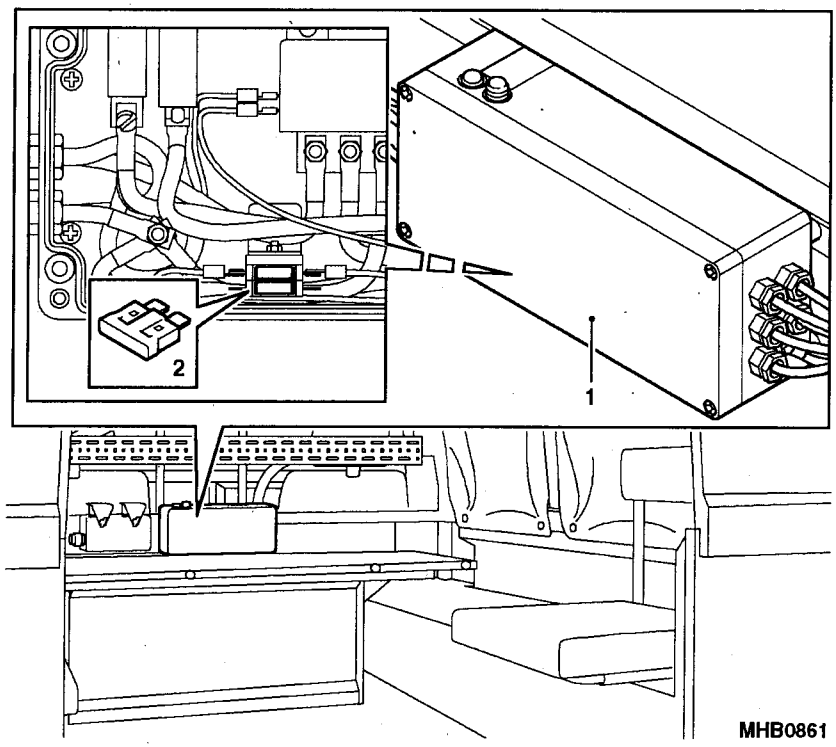

Fig 7 Relay box fuse renewal

Power import/export socket - 3 amp fuse renewal

13 A 3 amp fuse is provided to protect the power import relay. To renew the fuse carry out the following:

13.1 Disconnect any external power cables from the import/export socket (refer to warning label (3)).

13.2 Press the battery isolation switch to isolate the system (refer to Chap 3-2).

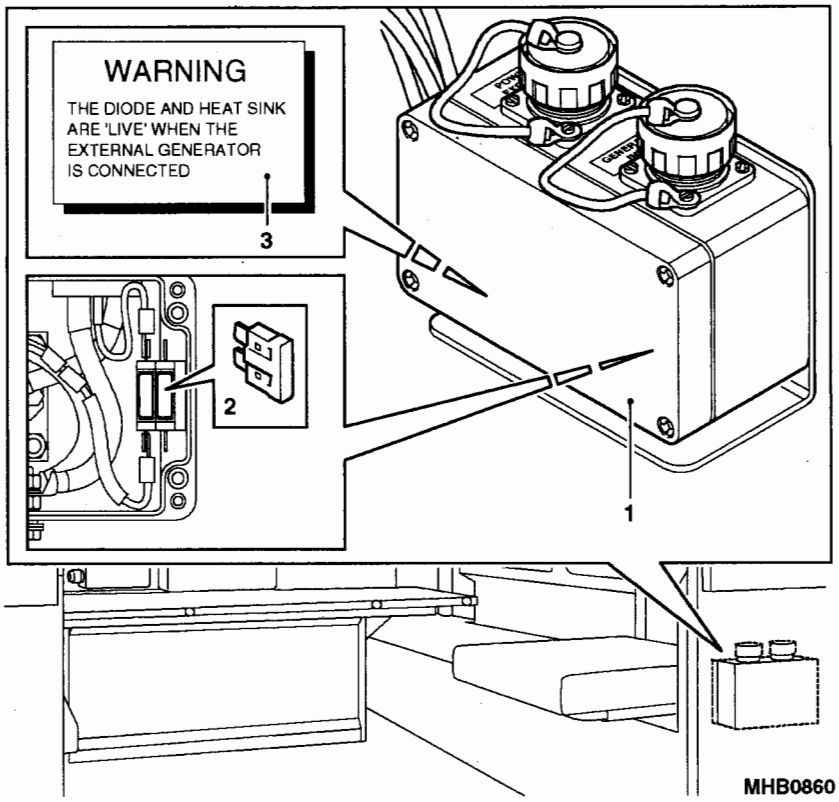

Fig 8 Import /export socket fuse renewal

13.3 Remove the four screws securing the power import/export cover and remove the cover (1).

13.4 Renew the fuse (2) with the spare supplied.

13.5 Refit the cover.

13.6 Reset the isolation switch (refer to Chap 3-2).

13.7 Reset the circuit breakers on the relay box to restore power to the system (refer to Chap 3-2).

13.8 Replace the spare fuse as soon as possible.

Warning buzzer and test button.

14 A warning buzzer and test button (Fig 9) is provided to prevent the radio batteries from being reconnected incorrectly.

WARNING

TO ALLOW THE BUZZER TO WARN OF INCORRECT CONNECTION IT IS IMPORTANT THAT THE RADIO BATTERIES HAVE BEEN ISOLATED FROM THE AUXILIARY TERMINAL BOX - REFER TO PARA 10.

15 The buzzer operates as follows:

15.1 Refit the batteries (refer to Para 10)

15.2 If the batteries are connected correctly the buzzer will not sound.

15.3 If the buzzer sounds, refer to Para 10.8.

15.4 To confirm that the buzzer is operational, depress the 'press to test' button. If the buzzer now sounds, correct reconnection of the batteries is confirmed and the battery lead to the auxiliary terminal box can be reconnected.

15.5 Refit the battery box cover (refer to Para 10).

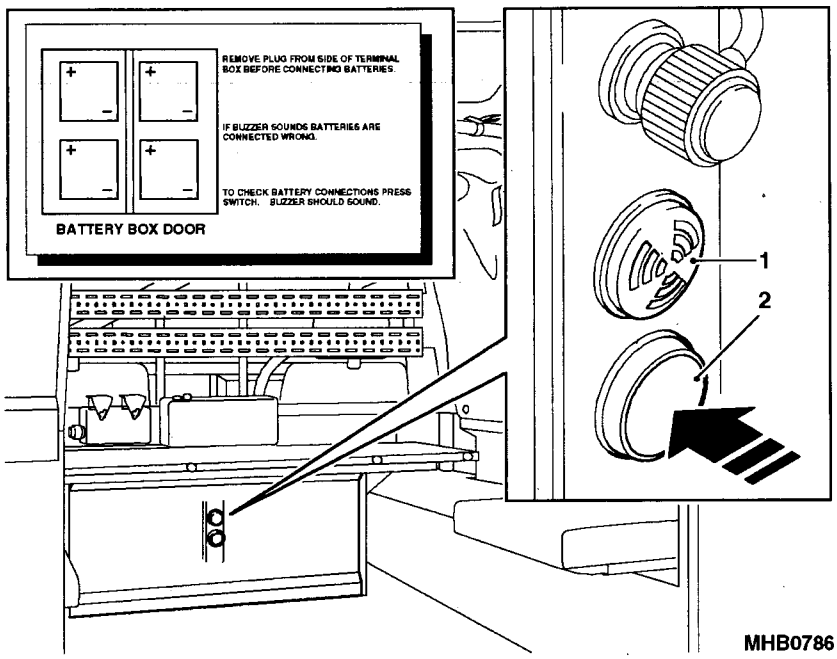

Fig 9 Warning buzzer and test button

CHAPTER 4-3

FIELD AMBULANCE

CONTENTS

Para

1 Introduction
2 General
3 Bulbs (CAUTION)
4 Headlights/side lights
5 Rotating beacons
6 Moonlight
7 Fluorescent roof lights
8 Floodlight
9 Interior cab light
10 Fuses
To replace the fuse
11 Spare wheel (WARNING)
To remove the wheel
To replace the wheel
12 Ventilator grille filter
13 Heater/air intake filter

Fig		Page
1	Side light bulb replacement	3
2	Rotating beacons	4
3	Moonlight	5
4	Fluorescent roof lights	6
5	Floodlight	7
6	Interior cab light	9
7	Removing the spare wheel	10
8	Ventilator grille filter	11
9	Heater/air intake filter	12

INTRODUCTION

1 This sub-chapter describes all the user maintenance applicable to the Field Ambulance.

General

2 All the service intervals for the subsequent paragraphs are to be found in the following documents: (CAT 601 Table 4 and 5). For the most efficient use of the vehicles, the service intervals should be adhered to.

BULBS

CAUTION

All the bulbs incorporated in the vehicle are of the 24 Volt type and should be changed immediately they have failed. Failure to do so will result in operating in an unreliable condition e.g. warning lights not indicating failure especially with the brakes, vehicle charging and 24 volt charging circuits.

3 The bulbs are either the push or the bayonet types. The appropriate bulb ratings are to be found in the "User Spares Data" (Chapter 5). The following paragraphs describe how to replace all the bulbs on the vehicle.

Headlights/sidelights

4 The headlights contain quartz halogen bulbs and incorporate the side lights.

CAUTION

ADJUSTMENT SCREWS. Care must be taken not to disturb the headlight beam adjustment screws.

4.1 Renew the sidelight bulb. Disconnect the negative earth lead from the battery.

4.2 Prise the headlight unit (Fig 1 (2)) from the headlight adjustment screws (1) and remove. The headlight lens can now be removed.

NOTE

To renew the headlight bulb refer to Chapter 4-1 paragraph 12.3.

4.3 Pull off the electrical connection (3) to the headlight and remove the rubber boot (4).

4.4 Withdraw the side light bulb holder (5) and withdraw the bulb (6).

4.5 Fit new bulb to the bulb holder.

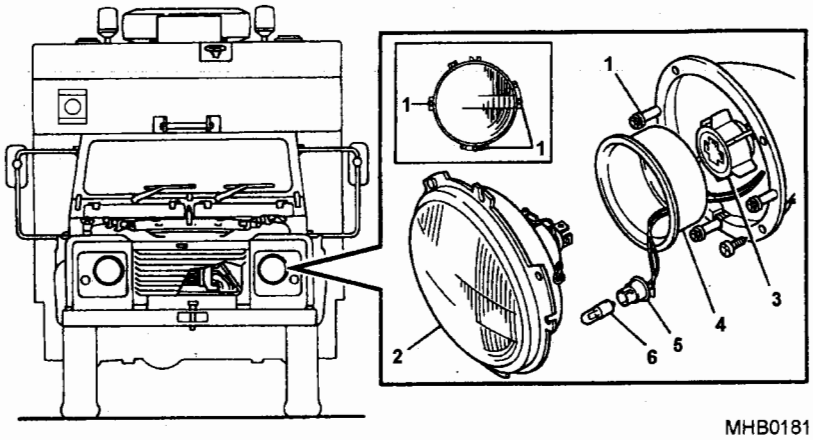

Fig 1 Side light bulb replacement

4.6 Refit the bulb holder into main lens.

4.7 Clean the headlight and rubber boot of old grease and recoat with silicon grease.

4.8 Refit the rubber boot and cable connector.

4.9 Refit the headlight unit to the headlight beam adjustment screws.

4.10 Reconnect the negative earth lead to the battery.

NOTE

The lights should be checked using the specialised headlight alignment equipment available.

Rotating beacons

5 The blue rotating flashing beacons are located externally on the ambulance compartment roof.

5.1 Renew the bulb. Disconnect the negative earth lead from the battery.

5.2 Remove the lens from the beacon base (Fig 2 (1)).

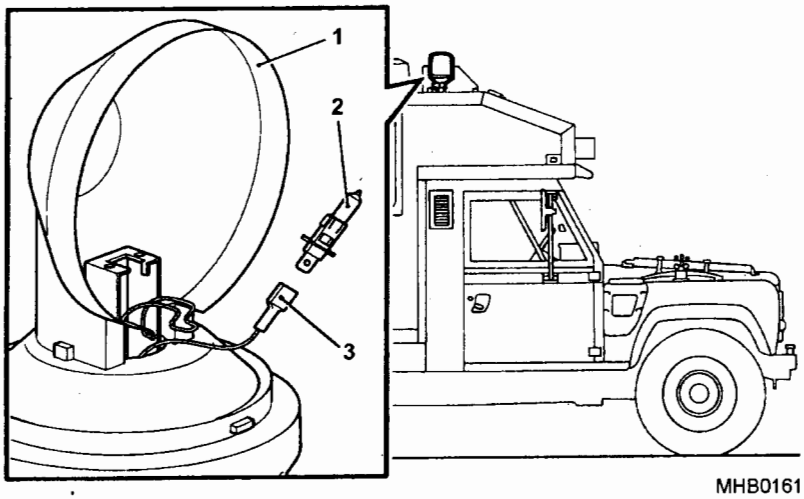

Fig 2 Rotating beacons

5.3 Using thumb and forefinger squeeze spring clips and ease the bulb holder from the base plate.

5.4 Disconnect the electrical lead (2) from the bulb (3). Remove and discard defective bulb.

5.5 Insert new bulb into holder and connect electrical lead.

5.6 Refit bulb holder to base plate.

5.7 Refit lens to base plate.

5.8 Reconnect the negative earth lead to the battery.

Moonlight

6 The moonlight is roof-mounted in the ambulance compartment, on the left side between the fluorescent lights.

6.1 Renew the bulb. Disconnect the negative earth lead from the battery.

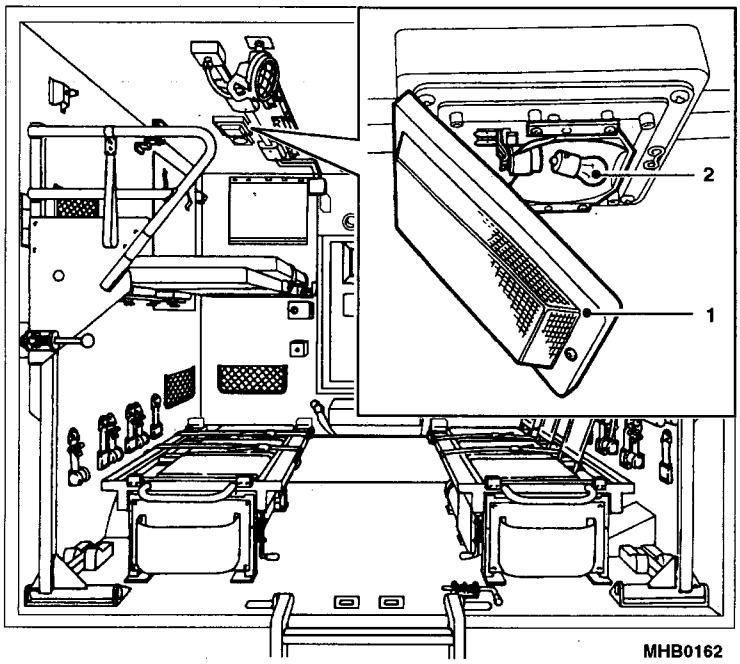

Fig 3 Moonlight

6.2 Remove the screw securing the cover (Fig 3 (1)) to the body of the light unit. Hinge down the cover.

6.3 Remove defective bulb (2) from bayonet fitting in holder. Discard bulb.

6.4 Fit new bulb in holder.

6.5 Hinge up the cover and secure with a screw to the body of the light unit.

6.6 Reconnect the negative earth lead to the battery.

Fluorescent roof lights

7 Four twin tube units are roof-mounted in the ambulance compartment, two units on either side.

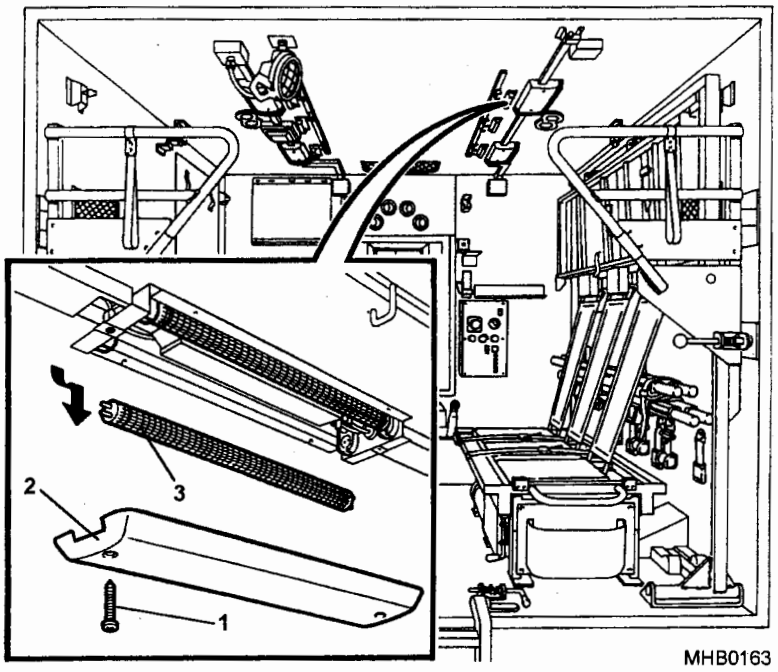

Fig 4 Fluorescent roof lights

7.1 Renew the tube. Disconnect the negative earth lead from the battery.

7.2 Remove the two screws (Fig 4 (1)) securing the cover (2) to body of light unit.

7.3 Remove defective tube (3) by twisting it through 90 degrees and pulling it from between its holders. Remove screen and discard tube.

7.4 Fit screen to new tube then insert between holders; line up pins at

each end of tube with slots in holders. Slide pins into slots and twist tube through 90 degrees.

7.5 Refit cover to body of light unit. Secure using two screws.

7.6 Reconnect the negative earth lead to the battery.

Flood light

8 The floodlight is located above the rear doors in the ambulance compartment.

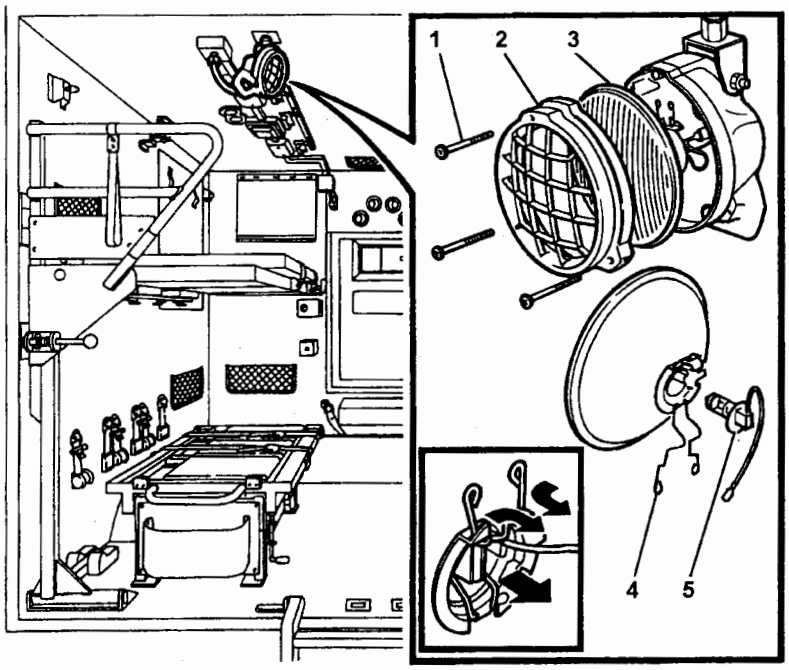

Fig 5 Floodlight

8.1 Renew the bulb. Remove three screws (Fig 5 (1)) from front cover (2) and remove cover.

8.2 Pull lamp unit (3) from rear cover.

8.3 Disconnect electrical lead from bulb (5).

8.4 Squeeze and release retaining clips (4), then remove and discard defective bulb.

8.5 Fit new bulb.

8.6 Reconnect electrical lead.

8.7 Refit lamp unit to rear cover.

8.8 Refit front cover and secure with three screws.

Interior cab light

9 This is located on the right hand side above the drivers head.

To renew the bulb

9.1 Undo screw (Fig 6 (1)) retaining the rim (2) and cover (3) and remove the rim and cover.

9.2 Replace bulb (4).

9.3 Refit cover and rim.

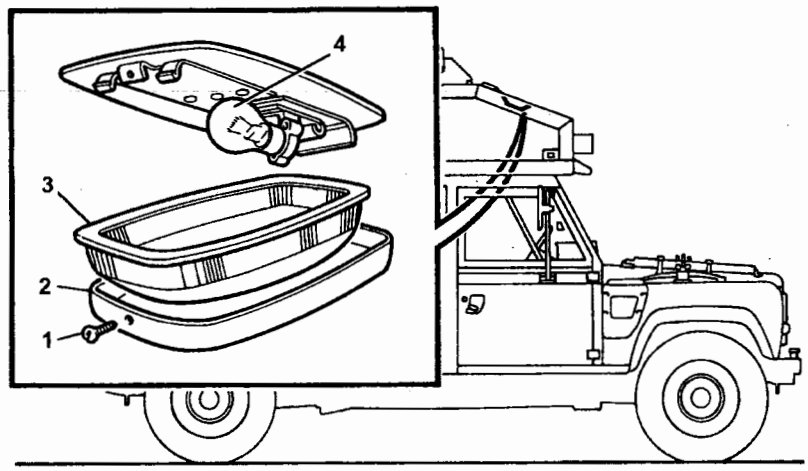

Fig 6 Interior cab light

FUSES

10 There are two fuses located behind the centre dash panel. These fuses are for the siren and beacon relay.

To replace the fuse

10.1 Remove the centre dash panel (refer to Chapter 4-2 paragraph 3.2)

10.2 Ease panel forward as far as possible to gain access to fuses.

10.3 Locate the defective fuse and replace with the same type of fuse.

10.4 Refit centre dash panel (refer to Chapter 4-2 paragraph 3.5).

SPARE WHEEL

11 The spare wheel is located on the ambulance compartment roof and retained by a clamp and two bolts.

WARNING

WHEEL. THE SPARE WHEEL IS HEAVY TO LIFT, TAKE CARE WHEN LIFTING IT ON AND OFF. THIS WILL REQUIRE TWO MEN.

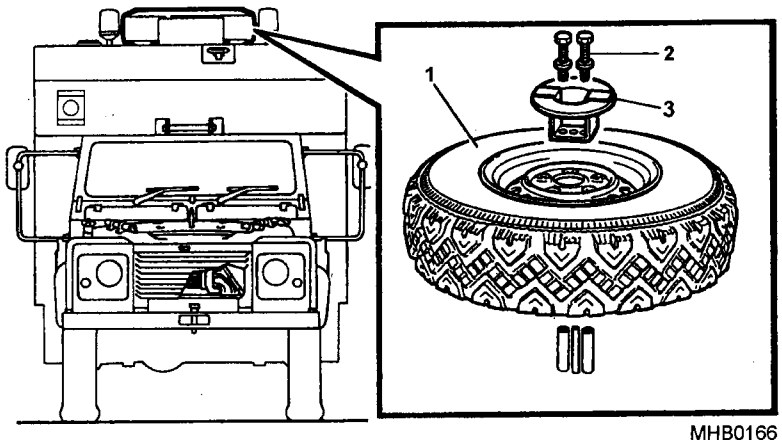

Fig 7 Removing the spare wheel

11.1 Remove the wheel. Undo and remove the two retaining nuts (Fig 7 (2)) and clamp plate (3).

11.2 Taking care not to damage the vehicle, lower the wheel (1) down to the bonnet.

11.3 From the bonnet lower the wheel onto the ground.

11.4 Replace the wheel. Place the spare wheel on to the bonnet.

11.5 Taking care not to damage the vehicle move the wheel from the bonnet to its location on the roof.

11.6 Fit the clamp plate and secure with the two retaining nuts.

VENTILATOR GRILLE FILTER

12 The ventilator grille filter is situated behind the grille panel, which is located on the right-hand side of the vehicle behind the cab door.

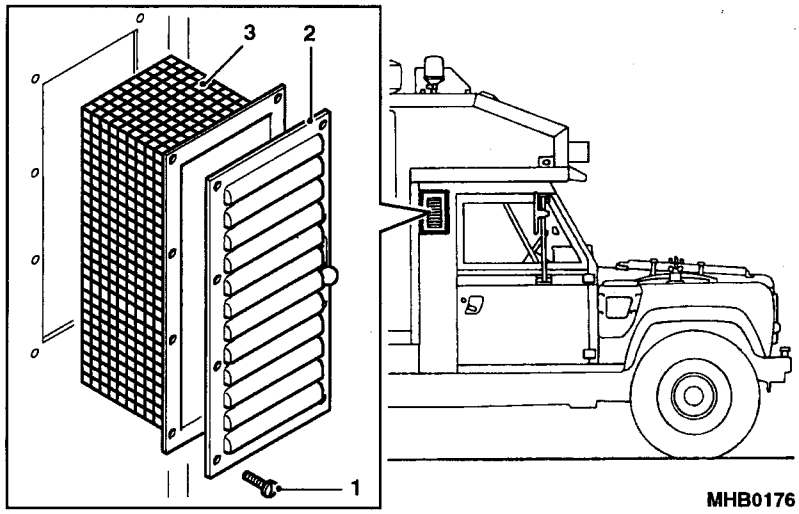

Fig 8 Ventilator grille filter

12.1 Replace the filter. Undo the four screws (Fig 8 (1)) holding the panel (2) and remove panel.

12.2 Withdraw the filter (3) from its location and discard.

12.3 Fit a new filter.

12.4 Replace the panel and secure with the four screws.

HEATER/AIR INTAKE FILTER

13 The heater/air intake filter is located in the rear of the intake box.

13.1 Replace the filter. Undo the four wing nuts and washers (Fig 9 (1)) holding the cover plate (2) and gasket (3) and remove the filter (4).

13.2 Fit a new filter.

13.3 Replace the panel and secure with the four screws.

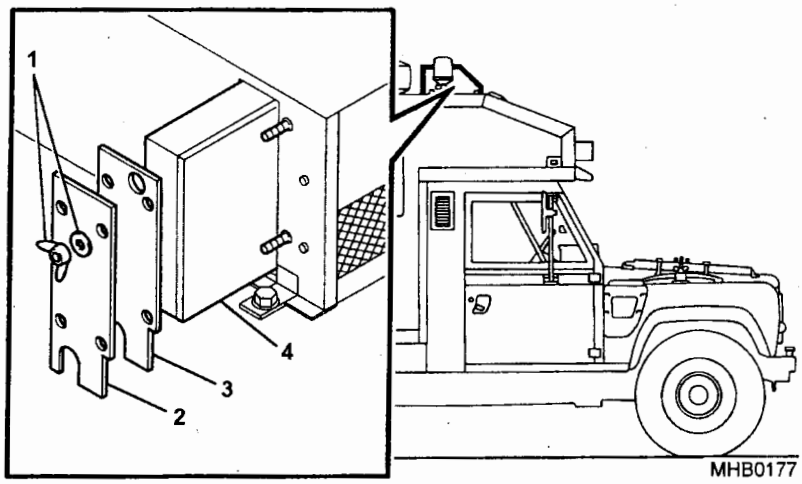

Fig 9 Heater/air intake filter

CHAPTER 4-4

WINTER/WATER

CONTENTS

Para

1 Introduction
2 General
3 Bulbs (CAUTION)
4 Warning lights
5 Rocker switches
6 Convoy light
7 Headlights (CAUTION)
8 Side repeater lights
9 Fuse boxes (WARNING)
10 Main fuse box
Main harness fuse box (WARNING)
13 Raised air intake
14 Air cleaner
15 To renew the air cleaner element
16 Breather manifold
18 Engine cooling system (WARNING) (CAUTIONS)
19 Expansion tank
20 Cooling system protection
21 Flushing the engine cooling system
22 Windscreen washer reservoir
To top up the reservoir
23 Daily and weekly checks
Daily checks
Weekly checks

Fig		Page
1	Warning lights	3
2	Rocker switches	4
3	Convoy light	5
4	Headlights	7
5	Side repeater lights	8
6	Main fuse box	9
7	Main fuse box label	10
8	Main harness fuse box	11

(continued)

CONTENTS (continued)

Fig		Page
9	To check the dump valve	12
10	To renew the air cleaner element	13
11	Breather manifold drain plug	14
12	Radiator, thermostat and expansion tank	16
13	Radiator bottom hose	17
14	Cylinder block drain plug	17
15	Windscreen washer bottle	19

INTRODUCTION

1 This Sub-Chapter describes all the user maintenance applicable to the Truck Utility Light (TUL) HS and Truck Utility Medium (TUM) HS Winter/water vehicles that are not covered in the previous chapters.

General

2 All the service intervals for the subsequent paragraphs are to be found in the following document: (CAT 601 Table 4 and 5). For the most efficient use of the vehicles, the service intervals should be adhered to.

BULBS

CAUTION

24 VOLT. All the bulbs incorporated in the vehicle are of the heavy duty 24 Volt type and should be changed immediately they have failed. Failure to do so will result in operating in an unreliable condition e.g. warning lights not indicating failure especially with the brakes, vehicle charging and 24 volt charging circuits.

3 The bulbs are either the push or the bayonet types. The appropriate bulb ratings are to be found in the "User Spares Data" (Chapter 5). The following paragraphs describe how to replace all the bulbs on the vehicle.

Warning lights

4 The warning lights panel is an integral part of the instrument console that is situated the centre of the dash and it contains eleven bulbs.

4.1 Disconnect the negative earth lead from the battery.

4.2 Remove the two screws (Fig 1 (1)) retaining the warning lights panel and ease the panel forward to gain access to the bulbs.

4.3 Remove the appropriate plug connector (2) from the rear of the warning lights panel.

4.4 Twist the bulb holder (3) (5) and pull it from its socket.

4.5 Pull the bulb (4) (6) from its holder and discard.

4.6 Fit a new bulb and replace the holder into its socket.

4.7 Replace the plug connector and carefully fit the warning lights panel.

4.8 Secure with the two screws to the instrument panel.

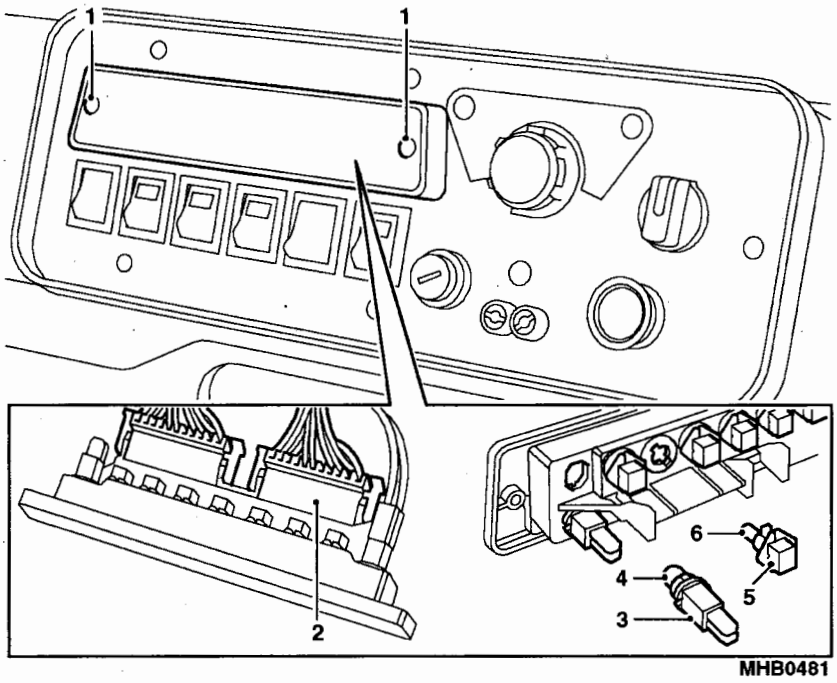

Fig 1 Warning lights

Rocker switches

5 The rocker switches are located in the instrument console and are replaced thus:

NOTE

There are four switches in the console where bulbs can be replaced.

5.1 Disconnect the negative earth lead from the battery.

5.2 Ease the rocker cover (Fig 2 (1)) off.

5.3 Ease the bulb (2) from its holder within the switch and discard.

5.4 Fit a new bulb into its housing and refit the cover.

5.5 Reconnect the negative earth lead to the battery.

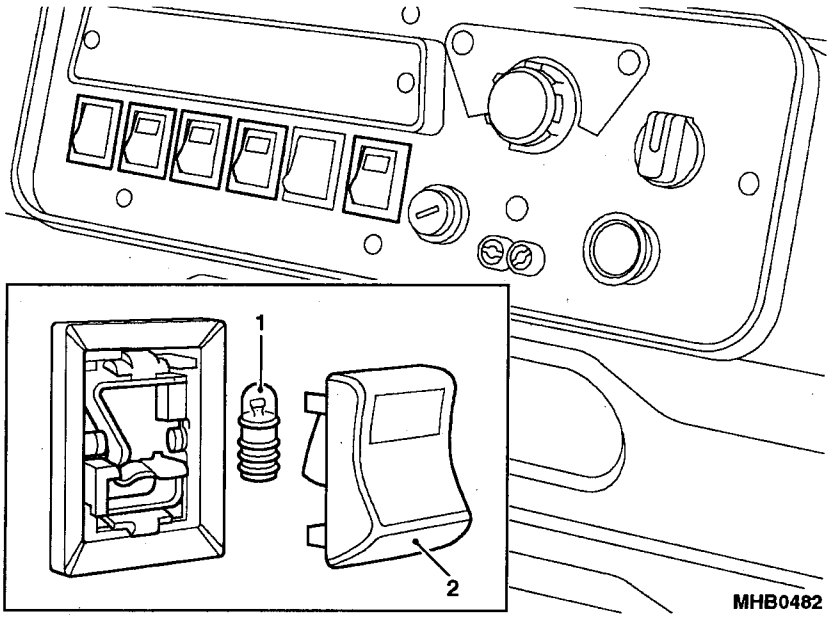

Fig 2 Rocker switches

Convoy light

6 The convoy light is situated underneath and to the rear of the vehicle. It is located on the right hand chassis member.

6.1 Disconnect the negative earth lead from the battery.
6.2 7Clean the exterior of the light (Fig 3 (2)) if dirty so access can be made more easily.

6.3 Unscrew the retaining cap (1) and remove the bulb holder from the convoy light.

6.4 Press and twist to release the bulb (3) from the holder and discard.

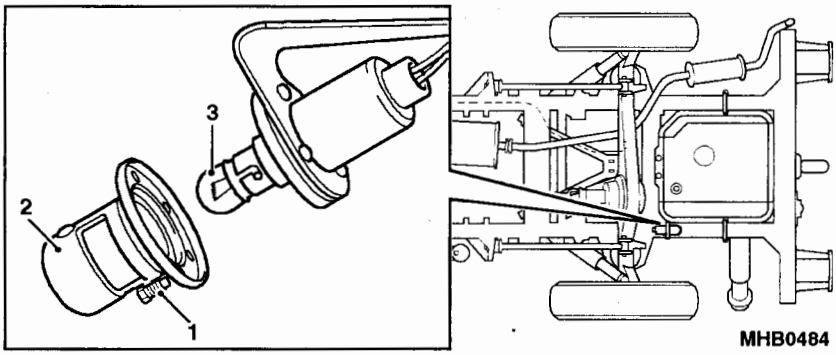

Fig 3 Convoy light

6.5 Fit a new bulb into the holder.

6.6 Refit the bulb holder and secure by tightening the retaining cap.

6.7 Reconnect the negative earth lead to the battery.

Headlights

7 The headlights contain quartz halogen bulbs and the procedure for renewing the bulb is as follows:

CAUTION

ADJUSTMENT SCREWS. Care must be taken not to disturb the headlight beam adjustment screws

7.1 Disconnect the negative earth lead from the battery.

7.2 Release the lamp guard from the front of the vehicle.

7.3 Prise the headlight unit (Fig 4 (2)) from the headlight beam adjustment screws (1) and remove. The headlight lens can now be removed.

7.4 Pull off the electrical connection (3) to the headlight, remove the rubber boot (5), release bulb retaining clip (5) and withdraw the bulb (6).

7.5 Fit new bulb and secure with retaining clip (5).

CAUTION

SEALANT. Ensure that the rubber boot is clean and free of old grease to ensure a secure seal when replaced.

7.6 Clean the headlight and rubber boot of old grease and recoat with silicon grease.

7.7 Refit the rubber boot (4) and electrical connector (3).

7.8 Refit the headlight unit to the headlight beam adjustment screws (1).

7.9 Reconnect the negative earth lead to the battery.

7.10 Refit the lamp guard to the front of the vehicle.

NOTE

The lights should be checked using the specialised headlight alignment equipment available.

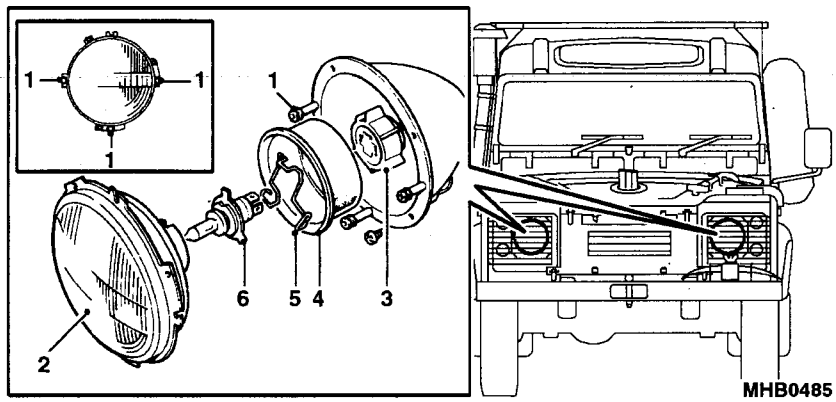

Fig 4 Headlights

Side repeater lights

8 The side repeater lights are located on either side of the vehicle wings mounted towards the front.

8.1 Disconnect the negative earth lead from the battery.

8.2 Push the lens (Fig 5 (1)) forward and ease outward to detach lens and bulb holder (2) from vehicle.

8.3 Remove the bulb holder from the lens.

8.4 Pull the bulb (3) from the holder and renew with new bulb.

8.5 Refit the repeater light in the reverse order of removal.

8.6 Reconnect the negative earth lead to the battery.

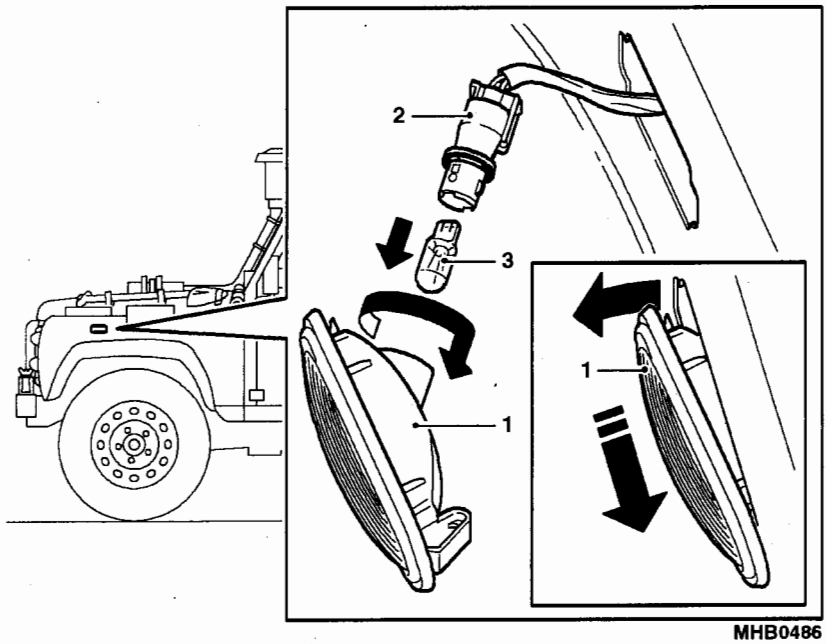

Fig 5 Side repeater lights

FUSE BOXES

WARNING

VEHICLE PROTECTION. THE MAIN HARNESS FUSEBOX CONTAINS FUSES WHICH PROTECT THE VEHICLE MAIN HARNESSES. SHOULD ANY OF THESE FUSES FAIL THE VEHICLE SHOULD BE TAKEN TO THE WORKSHOP AND THE FAULT RECTIFIED IMMEDIATELY.

9 There are two fuse boxes, the main fuse box and the main harness fuse box.

Main fuse box

10 The main fuse box (Fig 6) is located inside the vehicle to the left of the instrument console. It contains twenty fuses of the following values: 3; 5; 7.5; 10; 15 and 20 amperes.

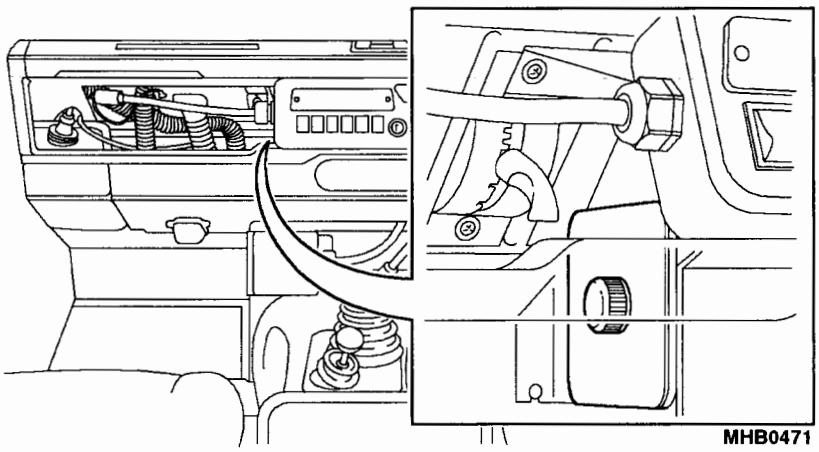

Fig 6 Main fuse box

10.1 Disconnect the negative earth lead from the battery.

10.2 Unscrew the knob and remove the fuse box cover.

10.3 Replace the failed fuse, ensuring the correctly rated one is fitted. (Check the fuse label (Fig 7) inside the cover for the correct rating).

10.4 Fit the fuse cover and secure ensuring a water tight seal.

10.5 Reconnect the negative earth lead to the battery.

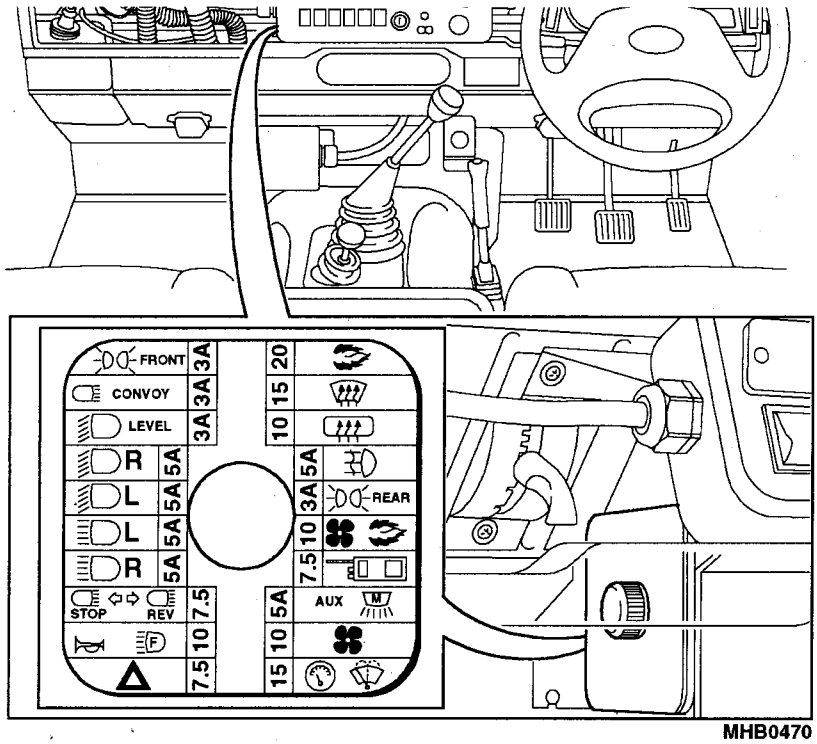

Fig 7 Main fuse box label

Main harness fuse box

11 The main harness fuse box (Fig 8) located below the fascia adjacent to the main gear change lever and contains 4 fuses of the following values: 20, 30 and 40 amperes.

12 Only spade type fuses of the correct rating should be used as replacements. The location and the items protected by the fuses are shown in the chart attached to the inside of the fuse box cover.

WARNING

FUSES. THESE FUSES PROTECT THE MAIN HARNESS, IF ANY OF THESE FUSES FAIL REPORT IT IMMEDIATELY. TO CONTINUE WOULD RESULT IN SERIOUS DAMAGE.

12.1 Disconnect the negative earth lead from the battery.

12.2 Undo the four screws and remove the fuse box cover.

12.3 Replace the failed fuse, ensuring the correctly rated one is fitted. (Check the fuse label inside the cover for the correct rating).

12.4 Fit the fuse cover and secure ensuring that it is water tight.

12.5 Reconnect the negative earth lead to the battery.

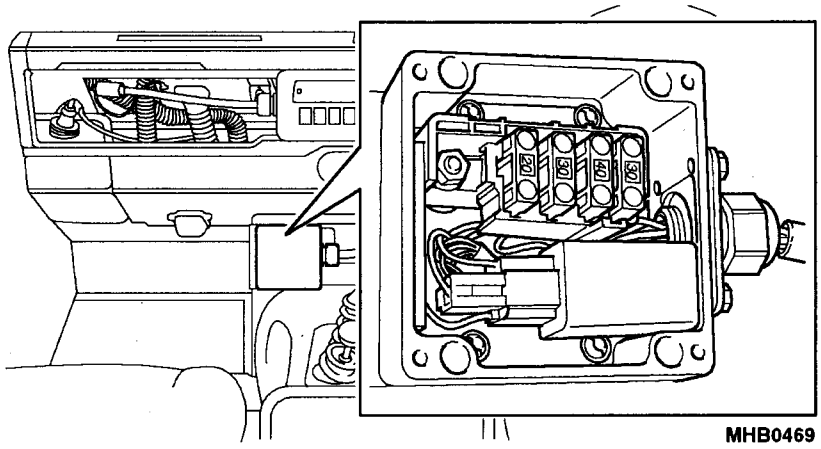

Fig 8 Main harness fuse box

RAISED AIR INTAKE

To check the dump valve

13 The dump valve provides an automatic drain for the air cleaner, and is fitted to the base of the air cleaner.

13.1 Squeeze open the dump valve (Fig 9) and check that the interior is clean.

13.2 Check that the rubber is flexible and in good condition.

13.3 If necessary, remove the dump valve to clean the interior.

13.4 Fit a new valve if the original one is in poor condition.

13.5 Under heavy conditions such as dusty, deep wading or field, attention must be more frequent.

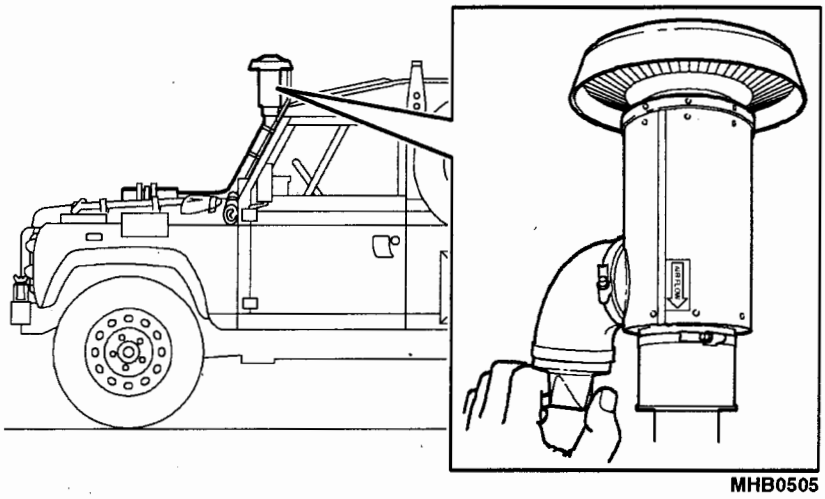

Fig 9 To check the dump valve

AIR CLEANER

14 The air cleaner is situated in the engine compartment on the right hand side.

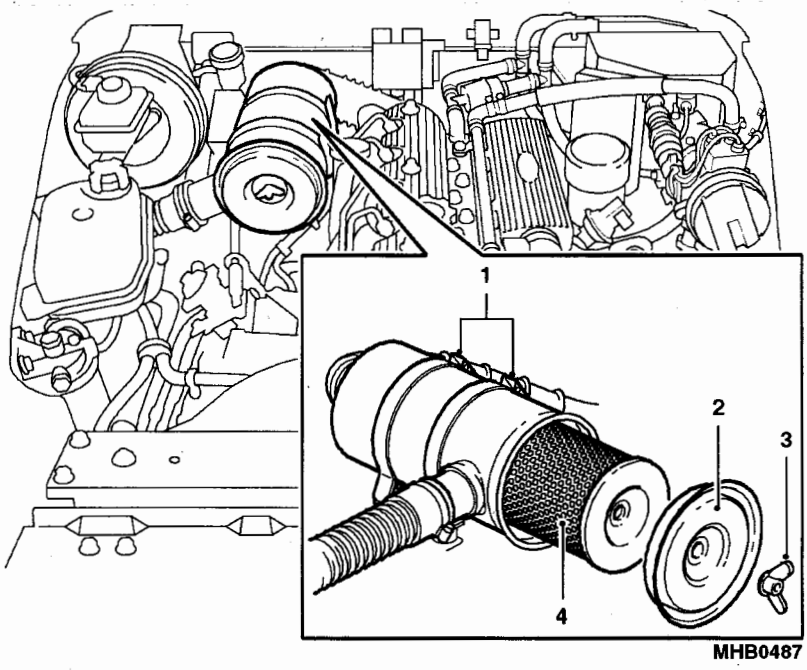

Fig 10 To renew the air cleaner element

To renew the air cleaner element

15 The air cleaner element is integral to the cleaner.

15.1 Pull up the clips (Fig 10 (1)) and raise the air cleaner from the cradle.

15.2 Undo the wing nut (3) and remove the end cover (2).

15.3 Undo the internal wing nut securing the element (4).

15.4 Remove the element (4) and discard.

15.5 Fit a new element and secure with internal wing nut.

15.6 Fit the end cover and secure with the wing nut.

15.7 Place air cleaner back in cradle and secure with clips.

BREATHER MANIFOLD DRAIN

16 The breather manifold drain is to release any fluids, which may have entered the breather system after deep wading.

17 To drain the system:

17.1 Unscrew the clip and remove the drain plug (Fig 11) from the pipe that is situated on the right hand side of the vehicle at the rear of the wheel arch.

17.2 When draining has been completed fit the plug back into the pipe and secure with the clip.

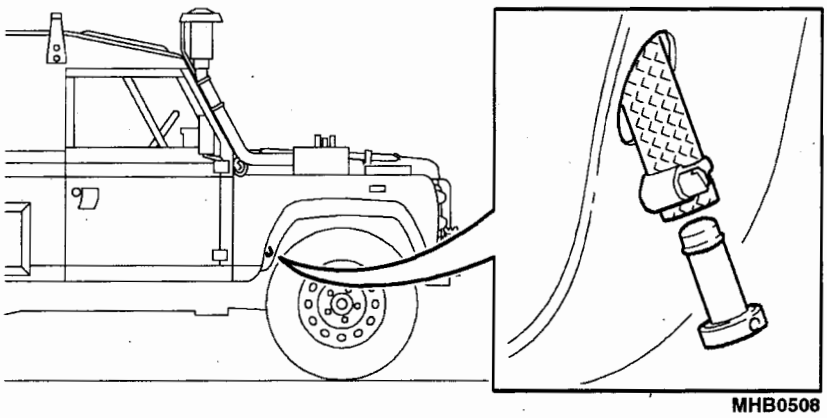

Fig 11 Breather manifold drain plug

ENGINE COOLING SYSTEM

WARNING

EXPANSION CAP. DO NOT REMOVE THE EXPANSION CAP WHEN THE ENGINE IS HOT BECAUSE THE COOLING SYSTEM IS PRESSURISED AND PERSONAL SCALDING COULD RESULT.

CAUTIONS

(1) EXPANSION CAP. Failure to tighten the expansion cap may result in coolant loss with possible damage to the engine through overheating.

(2) COOLANT. Never run the engine without coolant, not even for a very brief period, otherwise the injectors may be seriously damaged. This is due to the very high rate of heat transfer in the region of the injector nozzles.

(3) CORROSION. As a precaution against corrosion, the cooling system should be drained and flushed out as specified.

18 The cooling system is located inside the engine compartment and comprises of the expansion tank connected to the radiator by way of the engine. The engine coolant is a mixture of two fluids and is an aid to protecting the engine from overheating.

Expansion tank

19 The expansion tank is located on the right hand wing valance.

19.1 When removing the filler cap (Fig 12 (1)) proceed as follows:

19.2 Turn the cap anti-clockwise a quarter of a turn and allow the pressure to escape, before turning further in the same direction to lift it off.

19.3 When replacing the expansion tank cap, it is important that it is tightened down fully.

Cooling system protection

20 The cooling system should be protected as follows:

20.1 In cold climates against frost and corrosion by using the anti-freeze as specified.

20.2 It is essential therefore if the cooling system is drained or topped-up at any time either in winter or summer, to refill with a solution of water and the correct type of anti-freeze, otherwise damage to the engine will result.

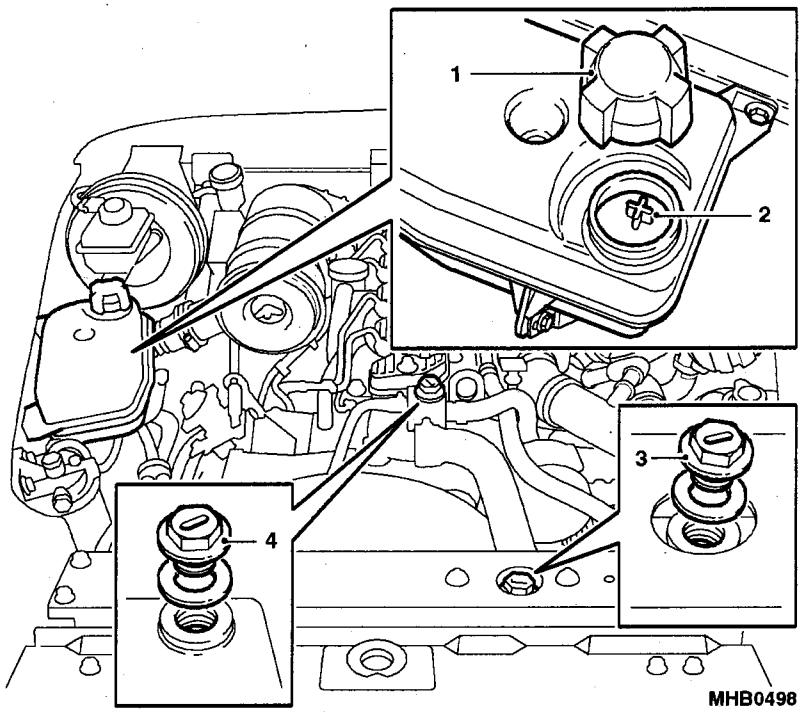

Fig 12 Radiator, thermostat and expansion tank

Flushing the engine cooling system

21 To flush the system

21.1 Remove the expansion tank cap (Fig 12 (1)) and radiator (3) and thermostat bleed plugs (4).

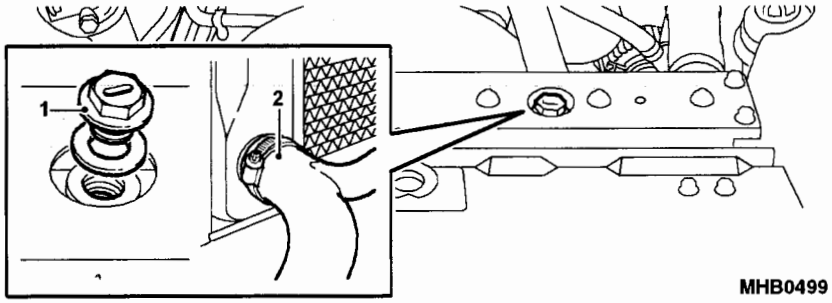

Fig 13 Radiator bottom hose

21.2 Remove radiator bottom hose (Fig 13 (2)).

21.3 Remove the cylinder block drain plug (Fig 14), which is on the left hand side of the engine.

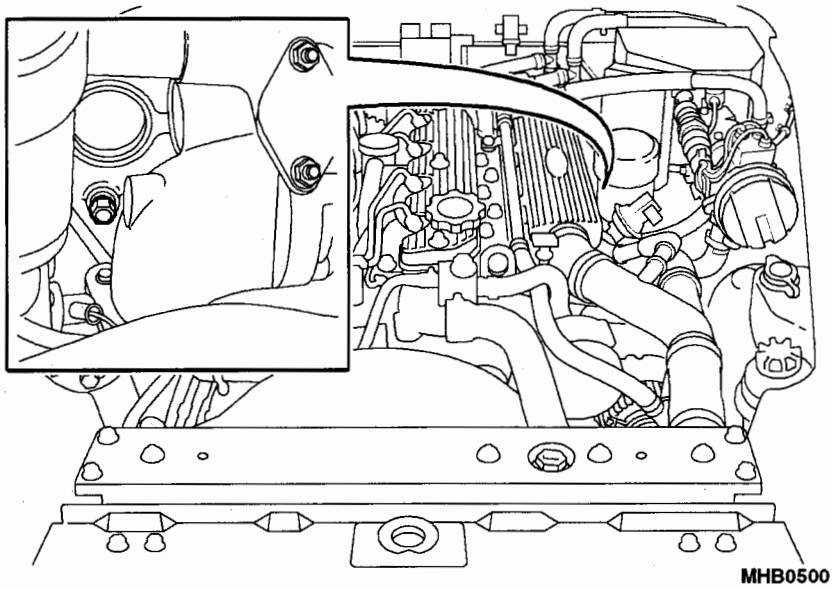

Fig 14 Cylinder block drain plug

21.4 To drain the expansion tank, disconnect the hose from the bottom of the tank.

21.5 Flush the system thoroughly.

21.6 Fit the expansion tank hose, engine drain plug and radiator bottom hose.

21.7 Fill the system with the coolant mixture of water and anti-freeze through the expansion tank until coolant appears at radiator bleed plug hole.

21.8 Fit the radiator bleed plug (refer to Fig 12 (3)).

21.9 Continue to fill until coolant appears at thermostat bleed plug hole.

21.10 Replace thermostat bleed plug (7).

21.11 Check expansion tank coolant level (2) is correct to the half way mark.

21.12 Fit the expansion tank cap (1), run the engine at idle for only 5 minutes, allow to cool and check level in expansion tank adding or removing coolant as necessary.

NOTES

(1) Never use salt water with anti-freeze or an inhibitor, otherwise corrosion will occur.

(2) In certain territories where the only available water supply may have some salt content, use only clean rainwater or distilled water.

(3) (After draining, flushing and refilling the system, the engine must be run for 5 minutes to ensure elimination of any air locks from within the cooling system.

WINDSCREEN WASHER RESERVOIR

22 The reservoir (Fig 15 (2)) is located under the wing valance on the left hand side and feeds the front and rear wash/wipe system.

22.1 To top up the reservoir. Remove reservoir cap (1).

22.2 Top-up to within approximately 25 mm (1.0 in) below the bottom of the filler neck.

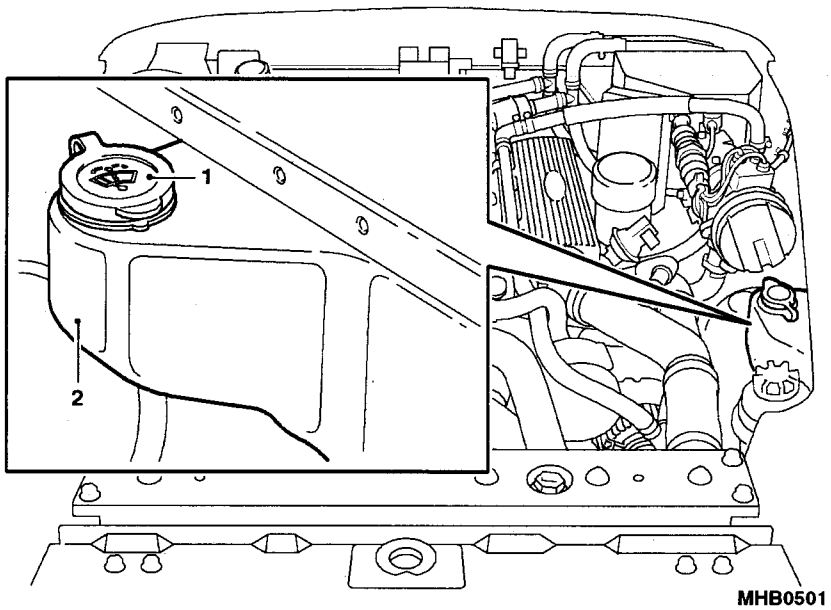

Fig 15 Windscreen washer reservoir

22.3 Use a screen washer solvent in the container, it will assist in removing mud, flies and road film from the windscreen.

22.4 Keep the washer bottle filled with clean water and solvent.

DAILY AND WEEKLY CHECKS

NOTE

Refer to the Cat 601 for a complete check of the system and at what intervals.

23 The following are the daily and weekly checks that are required for the correct operation of the vehicle.

Daily checks

23.1 Examine the vehicle for obvious signs of damage.

23.2 Ensure that the vehicle has sufficient fuel, oil and coolant for the journey.

23.3 Examine and operate the doors, locks, safety catches and bonnet catches.

23.4 Examine for clarity and damage the windscreen and windows.

23.5 Examine for cracks and deterioration of reflective surfaces of the rear view mirrors.

23.6 Examine and operate the seat belts and attachments.

23.7 Ensure the vehicle is fitted with serviceable fire extinguisher(s).

23.8 Ensure correct operation of the lamps, horn, windscreen wipers and washers, direction indicators, hazard warning lights, heaters and demisters, instruments and gauges.

23.9 Examine for damage and operate the obligatory front and rear lights and headlights.

23.10 Check level and replenish as necessary the windscreen washer reservoir.

23.11 Examine for security of attachment and damage of the windscreen washer reservoir.

23.12 Examine for cuts and other damage, check tread depth and pressures of the tyres (including spare wheel).

23.13 Visually examine wheels for security.

23.14 Examine registration, marker and legal plates.

23.15 Examine for damage and security of attachment of the reflectors.

23.16 Examine the towing pintle ensuring that the locking latch is free and locking pins are in place and attached by securing chains.

23.17 Ensure correct operation of the brakes and steering.

Weekly checks

23.18 Examine the alternator (FFR only) and serpentine belts for fraying and correct tension.

23.19 Check level and replenish as necessary the power steering reservoir.

23.20 Check level and replenish as necessary the brake and clutch reservoirs.

CHAPTER 4-5

WINTERISED

CONTENTS

Para

1 Introduction
2 General

INTRODUCTION

1 This sub-chapter describes all the items applicable to Truck Utility Light (TUL) HS and Truck Utility Medium (TUM) HS Winterised vehicles which are not covered in the previous chapters.

General

2 All information appertaining to the winterised vehicles can be found in sub-chapter 4-4.

CHAPTER 4-6

AIR DROP

CONTENTS

Para

1 Introduction
2 General

INTRODUCTION

1 This sub-chapter describes all the items applicable to Truck Utility Light (TUL) HS Air drop vehicles, which are not covered in the previous chapters.

General

2 All information appertaining to the air drop vehicles can be found in sub-chapter 1-1 and 1-2.

CHAPTER 4-7

HELICOPTER SUPPORT PLATFORM

CONTENTS

Para

1 Introduction
2 General

INTRODUCTION

1 This sub-chapter describes all the items applicable to the Truck Utility Medium (TUM) HS Helicopter Support Platform vehicles, which are not covered in the previous chapters.

General

2 All information appertaining to the Helicopter support platform vehicles can be found in sub-chapter 4-1 and 4-2.

CHAPTER 4-8

COMMANDERS IK

CONTENTS

Para

1 Introduction
2 Interior light
Fuses
3 Charger fuse
4 In line fuses

Fig		Page
1	Interior light	2
2	Charger fuse	3
3	In line fuses	4

INTRODUCTION

1 This sub-chapter gives the User Maintenance applicable to the Truck Utility Medium (TUM) HS Commanders IK.

INTERIOR LIGHT

2 To change the strip light (Fig 1) proceed as follows:

2.1 Undo the two screws (1) and lower the light cover (2).

2.2 Remove the strip light and fit new one.

2.3 Replace the cover and secure with the two screws.

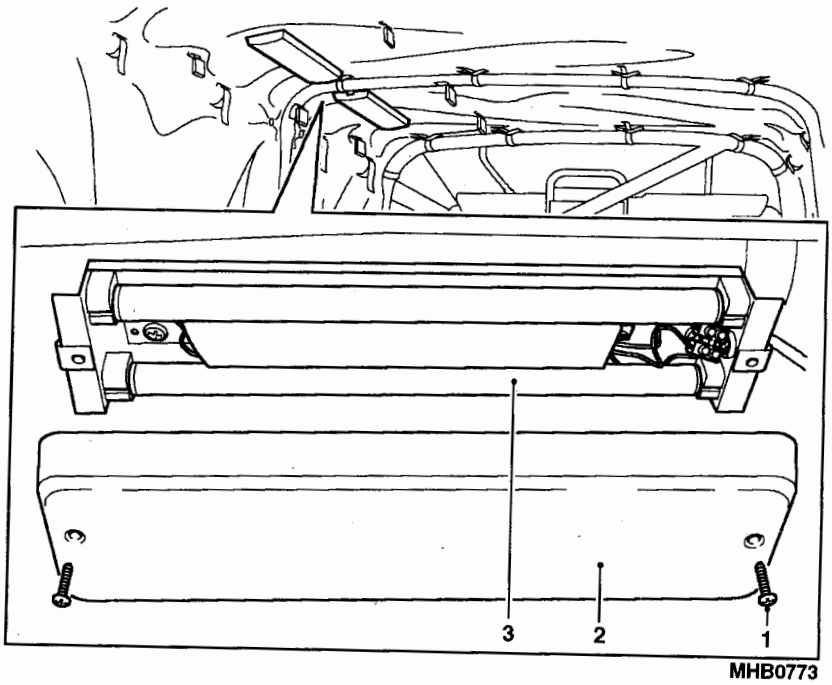

Fig 1 Interior light

FUSES

Charger fuse

3 To change the fuse accesses the charger (Fig 2) from underneath the desk.

3.1 Using a spade type screwdriver undo the capping (1) and remove the fuse (2).

3.2 Fit new fuse and replace capping.

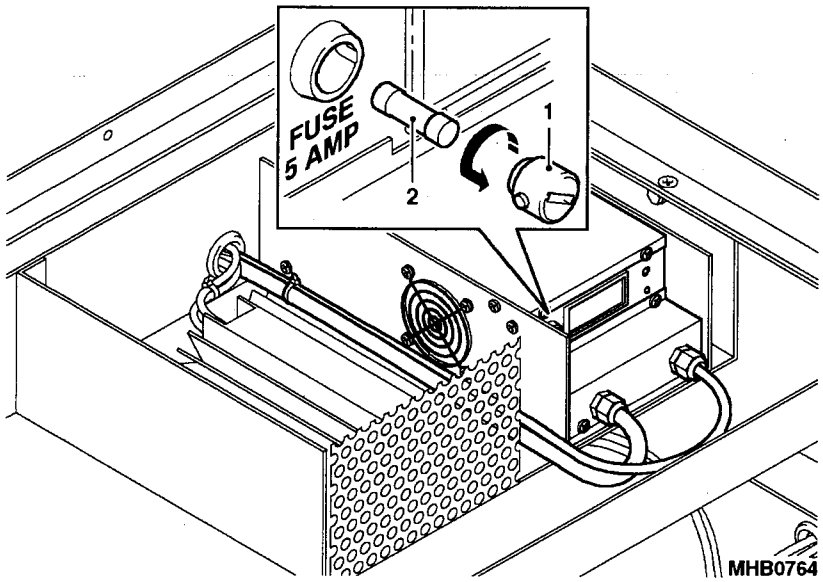

Fig 2 Charger fuse

In line fuses

4 To access the inline fuses (Fig 3) remove the battery cover.

4.1 Locate the fuses and remove the failed fuse.

4.2 Replace with new fuse and replace battery cover.

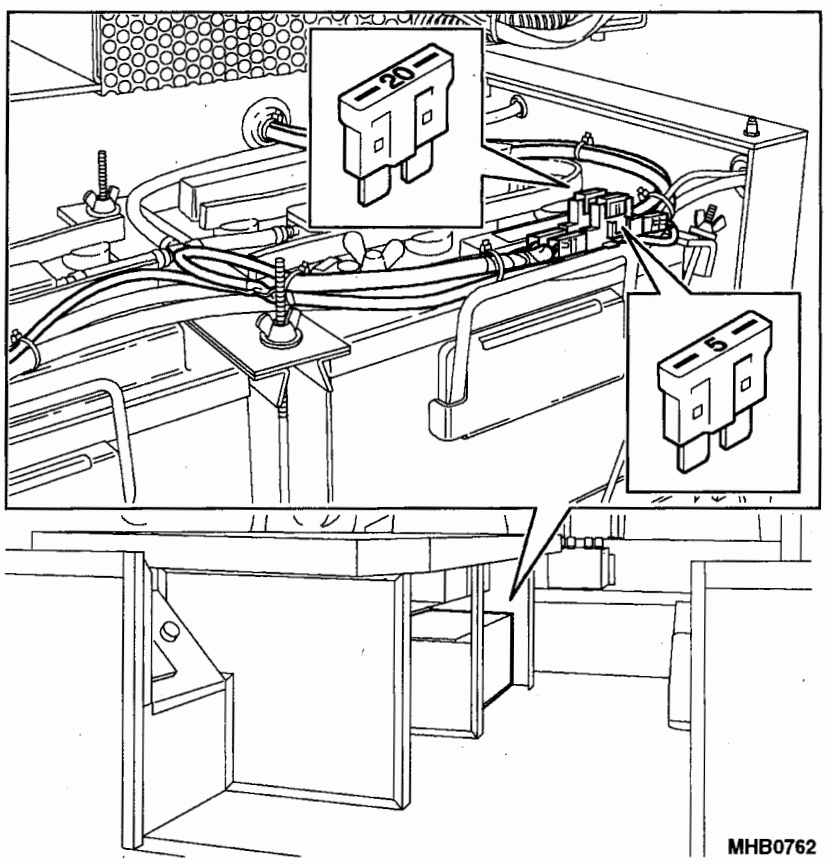

Fig 3 In line fuse

CHAPTER 4-9

WEAPONS MOUNTED INSTALLATION KIT (RWMIK)

CONTENTS

Para

1 Introduction
2 Spare wheel
3 Spare wheel lifting harness (WARNING)
4 Inflating vehicle tyres using the air locker compressor (WARNING)
5 FFR batteries
6 FFR battery configuration

Fig		Page
1	Removing the spare wheel	3
2	Removing the spare wheel using the lifting harness	3
3	Lowering the spare wheel using the lifting harness	4
4	Air compressor switch	5
5	Air locker compressor	6
6	FFR batteries	8
7	FFR battery configuration	9/10

INTRODUCTION

1 This sub-chapter describes all the items applicable to Truck Utility Medium (TUM) HS Weapons Mounted Installation Kit (RWMIK) vehicles, which are not covered in the previous chapters.

SPARE WHEEL

2 The spare wheel is stowed on a mounting bracket attached to the roll cage on the side of the vehicle and is retained with a clamp plate and bolt.

SPARE WHEEL LIFTING HARNESS

3 A spare wheel lifting harness is fitted on the side of the vehicle to enable the driver to remove and re-stow the spare wheel unassisted.

3.1 To remove the spare wheel. Undo and remove the retaining bolt (Fig 1 (1)) and clamp plate (2).

3.2 Pull the top of the wheel away from the vehicle and off the spare wheel carrier (Fig 2 (1)). Let the harness take the weight of the wheel and gently rotate the wheel downwards against the side of the vehicle (2) until the harness is fully extended (3).

3.3 Release the adjustment cleats and lower the wheel to the ground (Fig 3 (1)).

3.4 Remove the straps from the carbine (2), remove the straps from the spoke holes. The spare wheel is now ready for use.

3.5 To replace the spare wheel. Position the spare wheel under the harness with the rear face of the wheel facing outwards.

3.6 Push the straps through the spoke holes from the front of the wheel ensuring that they are three spoke holes apart.

3.7 Hook the straps on to the carbine and secure.

3.8 Lift the wheel off the ground by pulling the harness adjusting straps through the cleats until they meet the metal buckles.

3.9 Stow the excess straps in the bag in the centre of the harness assembly.

3.10 Using both hands, lift the lower edge of the wheel and turn it through 180 degrees against the side of the vehicle, so that the centre of the inverted wheel locates up against the wheel carrier.

3.11 Push the wheel upwards to locate it on the spare wheel carrier.

WARNING

FALLING OBJECTS. THE SPARE WHEEL MUST ALWAYS BE SUPPORTED IN POSITION ON THE WHEEL CARRIER UNTIL THE CLAMP AND BOLTS ARE FITTED.

3.12 Fit the clamp plate and secure with bolt.

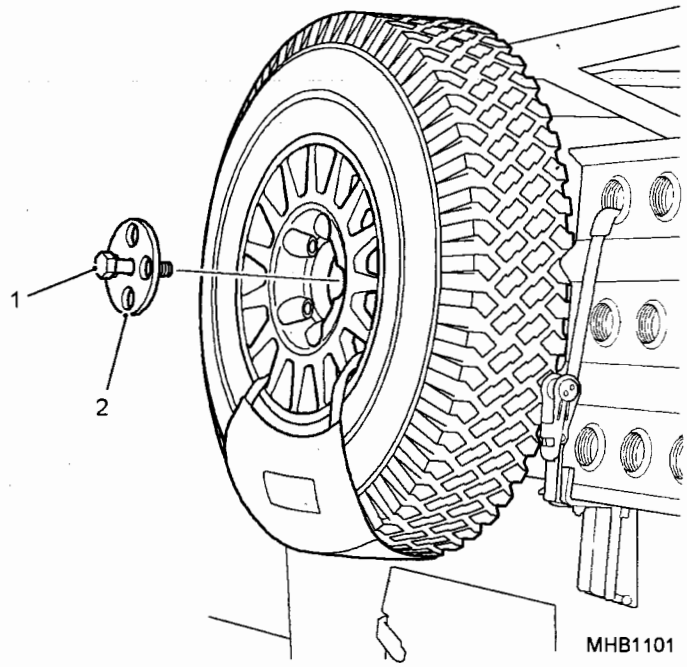

Fig 1 Removing the spare wheel

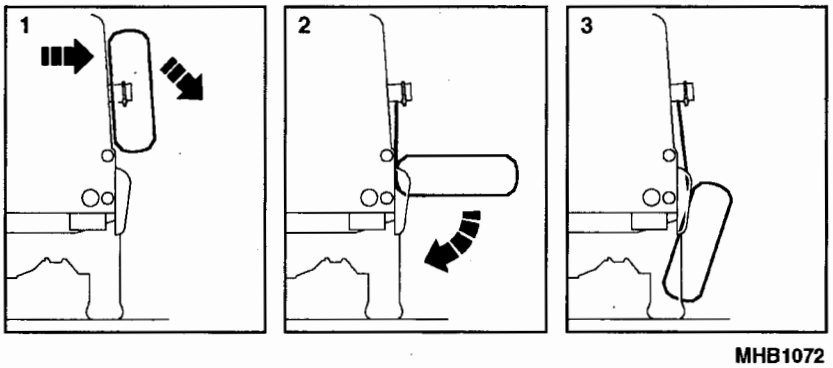

Fig 2 Removing the spare wheel using the lifting harness

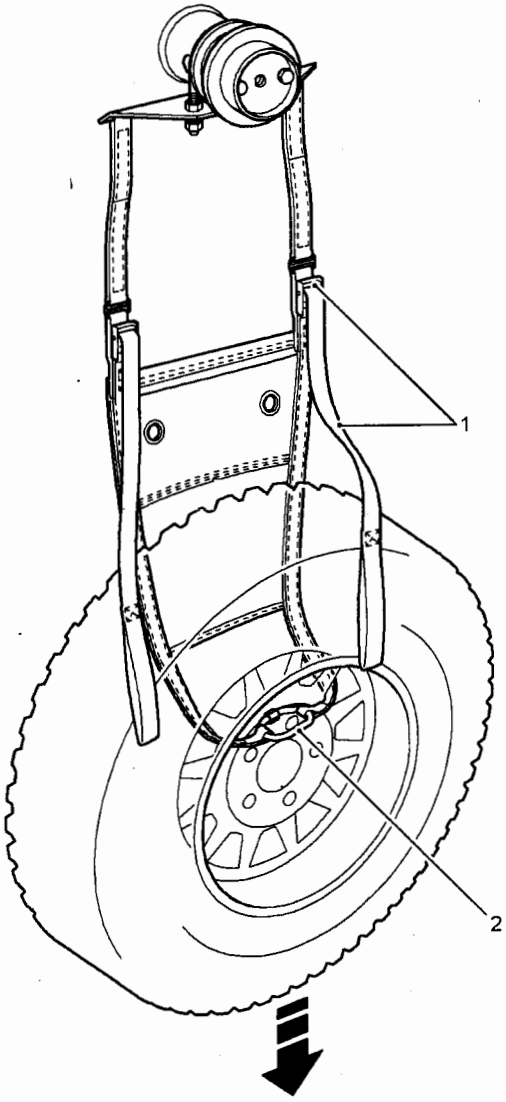

Fig 3 Lowering the spare wheel using the lifting harness

INFLATING VEHICLE TYRES USING THE AIR LOCKER COMPRESSOR

4 Vehicle tyres can be inflated using the ARB air lockers electric compressor and tyre inflation hose. To inflate the vehicle tyres proceed as follows:

WARNING

COMPRESSED AIR. DO NOT DIRECT AIR STREAM AT PERSONNEL AS THIS CAN CAUSE PERSONAL INJURY.

4.1 Connect the hose to the outlet (Fig 5 (1), on the air compressor (1). located in the stowage compartment on the left hand side of the vehicle

4.2 Connect the other end of the hose to the valve on the tyre to be inflated.

4.3 Start the compressor using the switch on the vehicle dash (Fig 4 (1)).

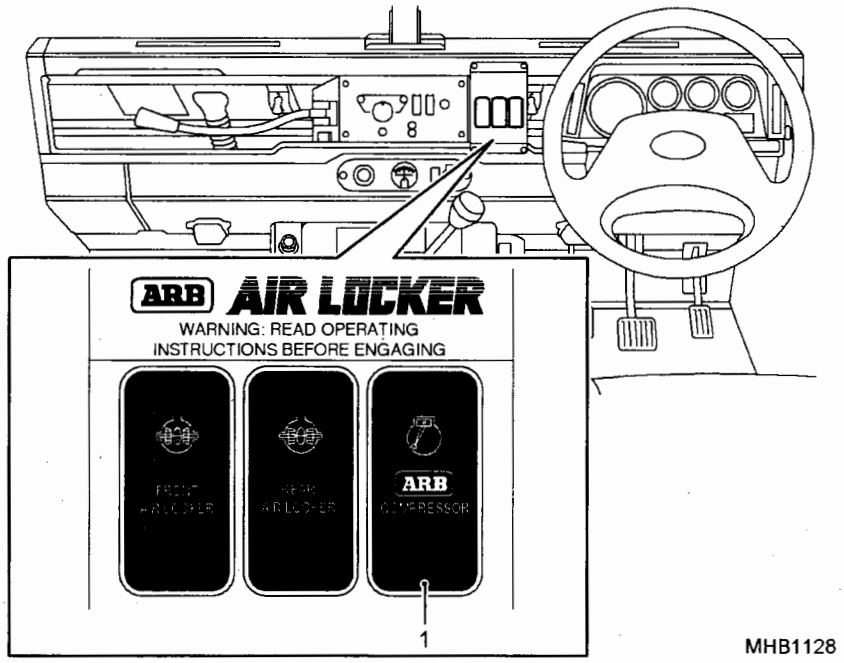

Fig 4 Air compressor switch

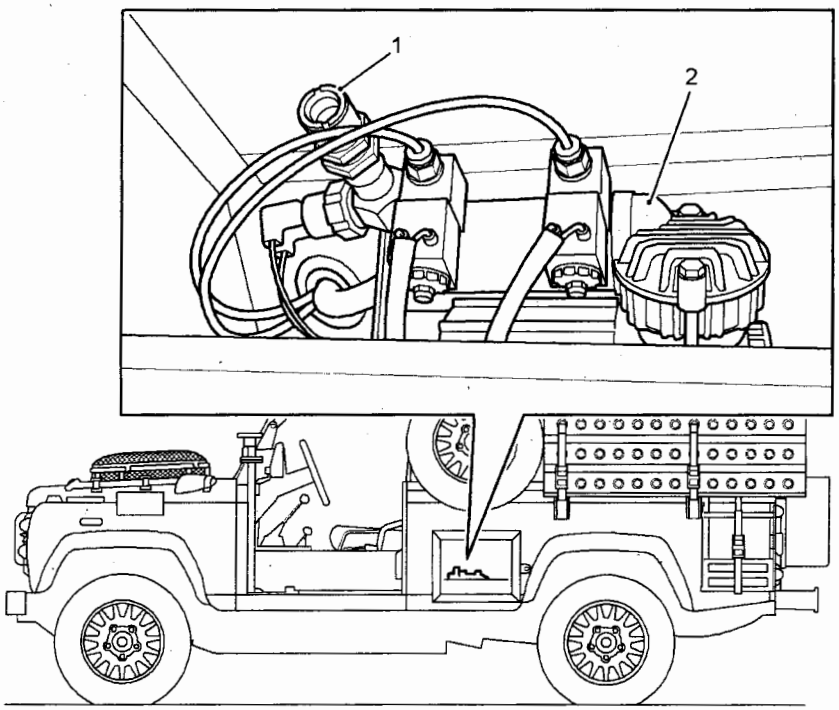

Fig 5 Air locker compressor

FFR BATTERIES

5 The FFR batteries are located underneath the right hand seat. To change the batteries:

5.1 Isolate the radio batteries from the alternator by removing the battery lead plug from the auxiliary terminal box.

5.2 Lift of the right hand seat cushion (Fig 6 (1)).

5.3 Undo the over centre catch (2) and slide the cover plate (5) from the seat base.

5.4 Disconnect the vehicle battery and radio battery negative leads.

5.5 Disconnect the vehicle battery and radio battery positive leads.

5.6 Disconnect the connecting lead from between the two radio batteries.

5.7 Undo the three nuts, which secure the battery, clamp plate (4).

5.8 Release the "J" bolts and remove the clamp plate (4), the batteries (3) can now be changed.

5.9 When the batteries have been replaced and secured reconnect the connecting lead between the two batteries.

5.10 Reconnect the vehicle and radio battery positive leads.

5.11 Reconnect the vehicle and radio battery negative leads.

5.12 Grease the battery terminals with the specified grease.

5.13 Slide the cover back into place and secure using the over centre catch.

5.14 Replace the seat cushion.

5.15 Reconnect the battery lead plug to the auxiliary terminal box.

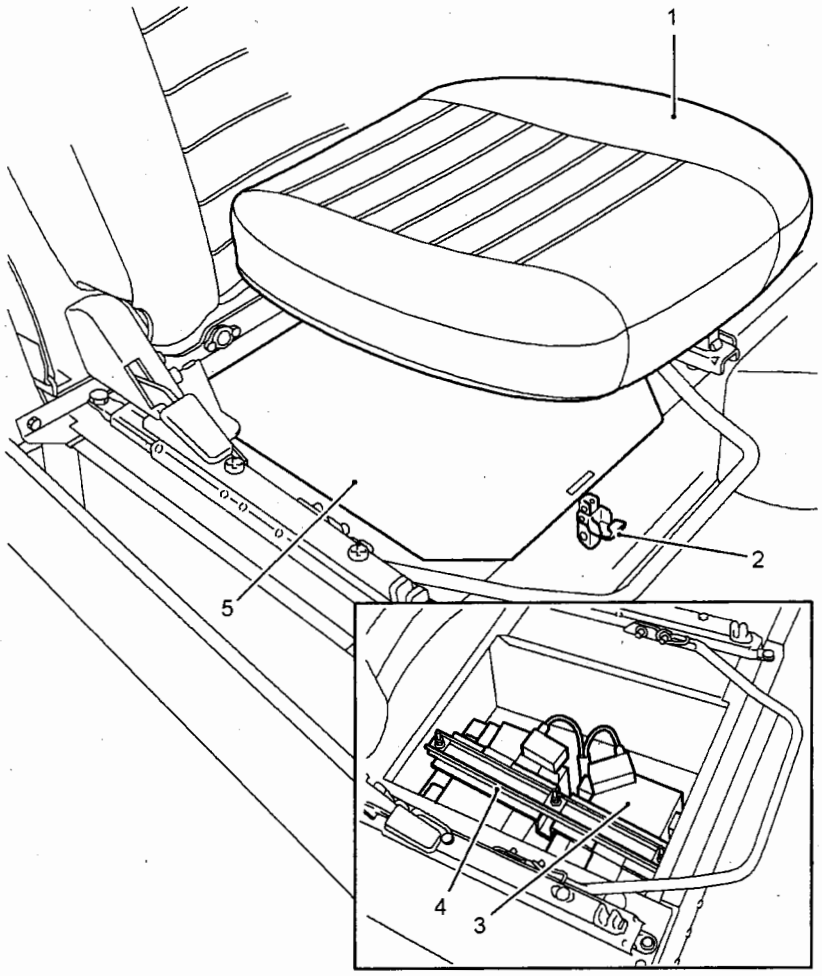

MHB1092

Fig 6 FFR batteries

FFR BATTERY CONFIGURATION

6 Ensure that when replacing FFR batteries they are positioned and connected in the correct sequence (refer to Fig 7).

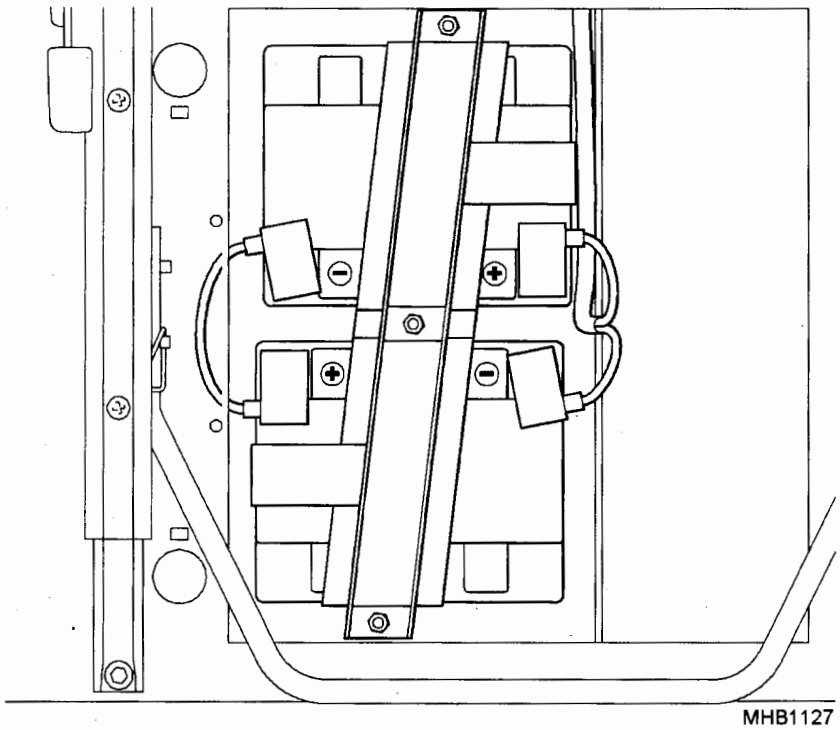

Fig 7 FFR battery Configuration

CHAPTER 4-10

TROPICAL FIELD AMBULANCE

CONTENTS

Para

1 Introduction
2 General

INTRODUCTION

1 This sub-chapter describes all the items applicable to the Tropical Field Ambulance vehicles, which are not covered in the previous chapters.

General

2 All information appertaining to the Tropical Field Ambulance vehicles can be found in sub-chapter 4-3.

NOTES

(1) Operate Air conditioning system for 10 minutes once a week set at maximum cold and maximum fan speed.

(2) In humid conditions ensure that the condensate drain tube is clear when operating the system.

CHAPTER 4-11

WINTERISED/WATERPROOFED FIELD AMBULANCE

CONTENTS

Para

1 Introduction
2 General

INTRODUCTION

1 This sub-chapter describes all the items applicable to the Winterised/Waterproofed Field Ambulance vehicles, which are not covered in the previous chapters.

General

2 All information appertaining to the Winterised/Waterproofed Field Ambulance vehicles can be found in sub-chapter 4-3.

CHAPTER 4-12

WATERISED
WEAPONS MOUNTED INSTALLATION KIT (WMIK)

CONTENTS

Para

1 Introduction
2 General

INTRODUCTION

1 This sub-chapter describes all the items applicable to Waterised Truck Utility Medium (TUM) HS Weapons Mounted Installation Kit (WMIK) vehicles, which are not covered in the previous chapters.

General

2 All information appertaining to the Waterised WMIK vehicles can be found in sub-chapter 4-4.

CHAPTER 5

USER SPARES DATA

CONTENTS

Para

1 Introduction
2 General
3 Bulbs
4 Fuses

Table Page

1 Bulbs 2
2 Fuses 3/4

INTRODUCTION

1 This chapter gives all the User Spares Data for carrying out all operations mentioned in this publication.

General

2 The information given in this Chapter is applicable to Truck Utility Light (TUL) HS, Truck Utility Medium (TUM) HS and (TUM) Ambulance HS. Where any information is applicable to FFR or Ambulance it will be identified as such.

BULBS

3 Table 1 consists of the bulb ratings for the lights located around the vehicles. For the location of the bulbs and replacement instructions see (Chapter 4-1, 4-3 and 4-8).

FUSES

4 Table 2 consists of the fuse ratings and the items they protect. For location of the fuses (Chapters 2-1, 2-2, 2-3 and 2-4) also for instructions on replacing the fuses (Chapters 4-1, 4-2, 4-3, 4-4 and 4-8).

TABLE 1 BULBS

Serial (1)	Bulb identification (2)	Rating (3)	
1	Headlight Right/left hand drive	24v	75W/70W
2	Side lights	24v	5W
3	Side repeater lights	24v	4W
4	Indicator lights	24v	21W
5	Stop lights	24v	21W
6	Tail lights	24v	5W
7	Rear fog guard lights	24v	21W
8	Reversing lights	24v	21W
9	Number plate light (2 Bulbs)	24v	4W
10	Convoy light	24v	7W
11	Warning lights panel	24v	1.2W
12	Instrument panel	24v	3W
13	Hazard warning light	24v	0.6W
14	Map reading light	24v	4W
15	Ammeter light (FFR only)	24v	3W
16	Moonlight (Ambulance only)	24v	10W
17	Fluorescent light strip (Ambulance only)	24v	8W
18	Cab interior light (Ambulance only)	24v	21W
19	Flood light (Ambulance only)	24v	70W
20	Inspection lamp (Ambulance only)	24v	60W
21	Rotating beacon (Ambulance only)	24v	70W
22	Interior lights (Commanders IK only)	24v	W

TABLE 2 FUSES

Serial (1)	Fuse Rating (2)	Circuits protected (3)	Colour (4)
1	7.5 Amp	Hazard warning lights	Brown
2	10 Amp	Horn and Headlamp flash	Red
3	15 Amp	Instruments and Wash/wipe	Light blue
4	7.5 Amp	Stop, Turn and Reverse lamp	Brown
5	10 Amp	Heater blower	Red
6	3 Amp	Convoy light	Purple
7	7.5 Amp	Radio (FFR only)	Brown
8	10 Amp	Heated rear windscreen	Red
9	20 Amp	Webasto heater blower (Winterised only)	Yellow
10	5 Amp	Rear fog	Tan
11	5 Amp	Right hand headlight - Dipped	Tan
12	5 Amp	Left hand headlight - Dipped	Tan
13	5 Amp	Right hand headlight - Main	Tan
14	5 Amp	Left hand headlight - Main	Tan
15	3 Amp	Front side lights	Purple
16	3 Amp	Rear side lights	Purple
17	3 Amp	Headlamp levelling	Purple
18	5 Amp	Auxiliary and interior lights	Tan
19	15 Amp	Heated front windscreen (Winterised only)	Light blue
20	20 Amp	Webasto heater (Winterised only)	Yellow
21	3 Amp	Siren (Ambulance only)	Purple
22	15 Amp	Flashing beacon relay (Ambulance only)	Light blue
23	80 Amp	50 Amp circuit (FFR only)	-
24	5 Amp	Charger (Commanders IK only)	-

CHAPTER 6

DESTRUCTION OF EQUIPMENT TO PREVENT ENEMY USE

CONTENTS

Para

1 Mandatory directive
3 Degree of damage
4 Spare parts
5 Means and procedures
7 Observance of appropriate safety precautions
8 Mechanical
9 Burning (WARNING)
10 Gunfire (WARNING)
11 Priorities

Table Page

1 Priorities for destruction..... 4

MANDATORY DIRECTIVE

1 Destruction of the equipment when subject to capture by the enemy, will be undertaken by the user arm, ONLY WHEN, in the judgement of the unit commander concerned, such action is necessary with orders of, policy established by the army or Divisional Commanders.

2 The reporting of the destruction of the equipment is to be done through command channels.

Degree of damage

3 The degree of damage inflicted, to prevent the equipment being used by an enemy, shall be as follows:

3.1 Methods of destruction should achieve such damage to equipment and essential spare parts, that it will not be possible to restore the equipment to a usable condition in the combat zone either by repair or cannibalisation.

3.2 Classified equipment must be destroyed in such degree as to prevent, whenever possible, duplication, or determination of operation or function by the enemy.

3.3 Any classified documents, notes, instructions or other written material pertaining to function, operation, maintenance or employment, including drawings or parts lists, must be destroyed in a manner to render them useless to the enemy.

3.4 In general, destruction of essential parts, followed by burning will usually be sufficient to render the equipment useless. However, selection of the particular method of destruction requires imagination and resourcefulness in utilisation of the facilities at hand under the existing conditions. Time is usually critical.

SPARE PARTS

4 The same priority for destruction of component parts of a major item necessary to render the item inoperable, must be given to the destruction of similar components in spare parts storage areas.

MEANS AND PROCEDURES

5 If destruction is ordered, due consideration should be given to:

5.1 Selection of a point of destruction that will cause greatest obstruction to enemy movement and also prevent hazard to friendly troops from fragments of ricocheting projectiles which may occur incidental to the destruction by gunfire.

OBSERVANCE OF APPROPRIATE SAFETY PRECAUTIONS.

6 The following information is for guidance only. Of the several means of destruction, those most generally applicable are as follows:

Mechanical

7 This requires an axe, pick, crowbar or similar implement. The equipment should be destroyed in accordance with the priorities given in (Table 1 Priorities).

Burning

WARNING

DUE CONSIDERATION SHOULD BE GIVEN TO THE HIGHLY FLAMMABLE NATURE OF GASOLINE AND ITS VAPOUR. CARELESSNESS IN ITS USE MAY RESULT IN PAINFUL BURNS.

8 This requires gasoline, oil or other flammable.

8.1 Remove and empty the portable fire extinguishers.

8.2 If quantities of combustibles are limited, smash all vital elements, such as switches, instruments and control levers.

8.3 Place ammunition and charges in and about the equipment so that the greatest damage will result from the explosion.

8.4 Pour gasoline and oil over the equipment. Ignite by means of an incendiary grenade fired from a safe distance, by a burst from a flame thrower, or by a combustible train of suitable length or appropriate means. Take cover immediately.

Gunfire

WARNING

FIRING ARTILLERY AT RANGES OF 457 METERS (500 YARDS) OR LESS, AND FIRING GRENADES OR ANTI-TANK ROCKETS SHOULD BE FROM COVER.

9 When destroying the equipment by gunfire, proceed as follows:

9.1 Remove and empty the portable fire extinguishers.

9.2 Smash all vital elements as outlined in (sub paragraph 2.5.2).

9.3 Destroy the equipment by gunfire, using tank guns, self propelled guns, artillery rifles using rifle grenades or launchers using anti-tank rockets.

PRIORITIES

10 The priorities for destruction should be considered as follows:

10.1 The priority must be given to the destruction of classified equipment and associated documents.

10.2 When lack of time and/or means prevents complete destruction of essential parts, and the same parts are to be destroyed on all like equipment.

10.3 A guide to priorities for destruction of the equipment is shown below (Table 1 Priorities).

TABLE 1 PRIORITIES FOR DESTRUCTION

Serial (1)	Item (2)	Priority (3)
1	Engine	1
2	Tyres	2
3	Hydraulic brake system	3
4	Gearbox	4
5	Differentials	5
6	Frame	6